STAUFF Hydraulic Accessories

Components for the construction of power units and reservoirs in hydraulics

Product Catalogue

Version
10/2025

Germany

Walter Stauffenberg GmbH & Co. KG
Im Ehrenfeld 4
58791 Werdohl

www.stauff.com

STAUFF products and services are globally available through wholly-owned subsidiaries and a tight network of authorised distributors and representatives in all major industrial regions of the world.

You can find detailed contact information on the last two pages of this product catalogue or at www.stauff.com/contact.

Please note: Unless otherwise stated, all data and figures in this product catalogue are approximate values and are only valid as references, which are not binding (also in respect to any third parties' rights of protection) and thus do not release the customer / user from checking and testing the suitability of the products for the foreseen purposes. Therefore, data and figures can only be used in a limited sense for construction purposes.

The application of the products is beyond the control possibilities of the manufacturer and, therefore, is exclusively subject to the responsibility of the customer / user.

In the event that a liability is nevertheless considered, any compensation will be limited to the value of the goods supplied by the manufacturer and used by the customer / user. As a matter of course, the manufacturer guarantees the perfect quality of all products in accordance with the General Terms and Conditions of Business and Sale.

Subject to modifications due to the ongoing development and improvement of the products.

With the publication of this product catalogue, previous editions are no longer valid.

Introduction	**4 - 11**
Fluid Level and Temperature Indicators	**12 - 21**
Tank Filler Breathers	**22 - 39**
Particle and Desiccant Breathers	**40 - 54**
Suction Strainers	**56 - 59**
Diffusers	**60 - 63**
Appendix (Product-Specific Abbreviations)	**65 - 66**

Catalogue 1
STAUFF Clamps

- Block Clamps
- Special Clamps
- Light Series Clamps
- Saddle Clamps
- U-Bolt Clamps
- Metal Clamps
- Construction Series

Catalogue 2
STAUFF Connect

- Tube Connectors
- Assembly Tools and Devices

Catalogue 3
STAUFF Flanges

- SAE Flanges
- Gear Pump Flanges

Catalogue 4
STAUFF Hose Connectors

- Hose Connectors
- High-Pressure Hose Connectors

Catalogue 5
STAUFF Quick Release Couplings

- Push-to-Connect Couplings
- Multi Couplings
- Screw-to-Connect Couplings

Catalogue 6
STAUFF Valves

- Two-Way Ball Valves
- Multi-Way Ball Valves
- Flow Control and Check Valves
- Gauge Isolator Valves

Catalogue 7
STAUFF Test

- Test Couplings
- Test Adaptors
- Test Hoses and Connectors

Catalogue 8
STAUFF Diagtronics

- Pressure Gauges
- Hydraulic Testers
- Oil Analysis Equipment

Catalogue 9
STAUFF Filtration Technology

- Replacement Filter Elements
- Pressure Filters
- Return-Line Filters
- In-Line Filters
- Spin-On Filters
- Offline and Bypass Filters
- Filtration Systems

Catalogue 10
STAUFF Hydraulic Accessories

- Fluid Level and Temperature Indicators
- Tank Filler Breathers
- Particle and Desiccant Breathers
- Suction Strainers
- Diffusers

For more than 50 years, the companies of STAUFF Group have been developing, manufacturing and distributing pipework equipment and hydraulic components for mechanical and plant engineering and for service and industrial maintenance.

In addition to mobile and industrial hydraulic machinery, Typeical applications also include commercial and special purpose vehicles, rail transportation and energy technology. Likewise, STAUFF products are used in marine, oil and gas applications and in the process, food and chemical industries.

The overall range currently includes about 50000 standard products as well as numerous special and system solutions according to customer's specifications or based on our in-house development.

All STAUFF products undergo relevant testing in accordance with international regulations and are governed by the high standards of the in-house quality management system. Furthermore, many items have received certifications and approvals from various international institutes, organisations and authorities who have independently confirmed the quality and performance of the products.

Wholly-owned manufacturing, sales and service facilities in 18 countries and a tight global network of authorised distribution partners ensure high presence and service paired with a maximum of availability.

Lloyd's Register LRQA

Quality Management – ISO 9001:2015
Environmental Management – ISO 14001:2015
Safety Management – ISO 45001:2018
Energy Management – ISO 50001:2018

STAUFF LINE Components

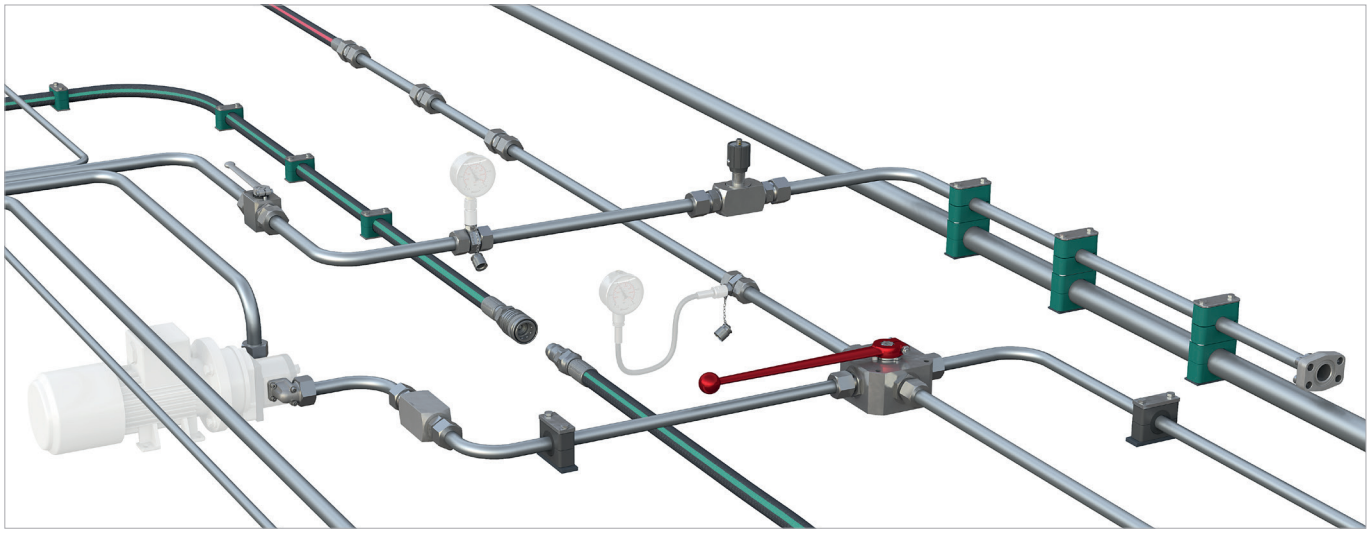

With the seven dedicated **STAUFF Line** product groups

- **STAUFF Clamps**
- **STAUFF Connect**
- **STAUFF Flanges**
- **STAUFF Hose Connectors**
- **STAUFF Quick Release Couplings**
- **STAUFF Valves**
- **STAUFF Test**

from own, in-house development and manufacturing, the companies of the STAUFF Group provide a comprehensive range of components for fastening and connecting pipes, tubes and hoses for mobile and industrial hydraulic applications and many other industries.

The portfolio is completed by components for shutting-off, regulating, throttling and measuring fluid media.

In order to perfectly match each other, STAUFF Line products are designed and offered on a high, uniform level of quality. A large proportion of the range made from steel comes as standard with the premium STAUFF Zinc/Nickel surface coating, which is also optionally available for many of the other components.

This coating offers the most reliable surface protection far beyond the previous market standards – even after transport, handling and assembly of the components – and meets all current legal requirements.

If desired, Original Equipment Manufacturers can be supported with value-added services, from **technical consultation** to **pre-assembly, assembly and kitting** as well as **logistics services**:

- Support with the **selection of suitable standard components** and ordering options; provision of **customised solutions** according to customer's specifications or based on our in-house development – from protoTypeing to large scale production

- **Analysis and optimization** of existing and design and developments of new systems aimed at increasing the efficiency and performance of machines and equipment and creating value for customers by reducing the total cost

- **Pre-assembly, assembly and kitting** of individual components to customer-specific system modules

- Individually coordinated **procurement solutions** (e.g. web shop and electronic data interchange) and **supply models** (e.g. from warehousing of customised components to Kanban logistics and just-in-time delivery of pre-fabricated system modules to the assembly lines of the customers) aimed at optimising material flows

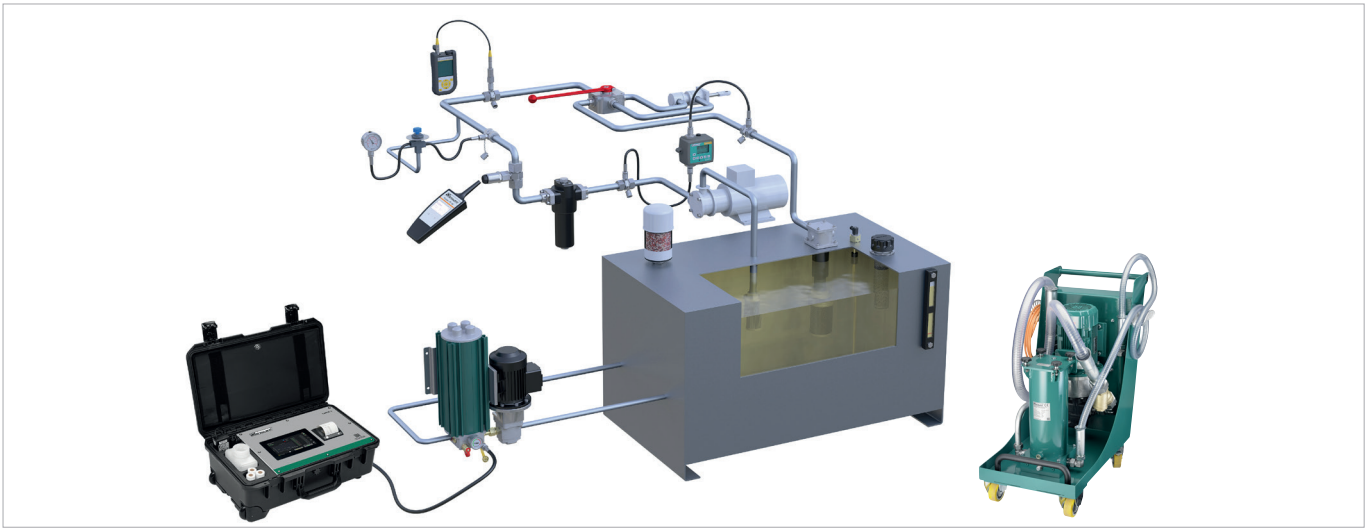

Aligned with the needs of the market, the product groups

- **STAUFF Test**
- **STAUFF Diagtronics**
- **STAUFF Filtration Technology**
- **STAUFF Hydraulic Accessories**

include a comprehensive range of analogue and digital measuring equipment and devices, filtration systems and replacement filter elements as well as accessories for the construction of tanks, reservoirs, power packs and gear boxes in mobile and industrial hydraulics.

The offer is completed by relevant value-added services:

- Support with the **selection of suitable components** and ordering options; provision of **customised solutions** according to customer's specifications or based on our in-house development – from protoTypeing to large scale production

- Analysis of existing hydraulic circuits aimed at filtration systems, tank components and monitoring devices that perfectly match to the specific requirements, and developing integrated concepts to increase the efficiency and performance of machines and equipment

- Individually coordinated **procurement solutions** and **supply models**

STAUFF Hydraulic Accessories

The consistently developed and enhanced STAUFF Hydraulic Accessories product range contains of well thought-out and sophisticated components suited to meet or exceed the increasing requirements of designing and building tanks, reservoirs, power packs and gear boxes for industrial and mobile hydraulic applications.

Whether you require visual or visual/electrical fluid level and temperature indicators, tank filler breathers in a variety of designs made of plastic or metal, or desiccant air breathers to protect your reservoir from contamination and moisture: STAUFF Hydraulic Accessories will provide you with the product you need.

The programme is completed by suction strainers and Diffusers that are positioned within the reservoir and connected directly to the suction and return lines.

For challenging applications, STAUFF is able to provide technically modified product versions, which, for example, convince with their outstanding resistance to external influences (such as high or low temperatures, aggressive media or UV exposure) or their compact and light-weight design.

STAUFF guarantees prompt service, even for customised solutions according to customer's specifications or based on our in-house development.

STAUFF

www.stauff.com

With the STAUFF Digital Platform available at www.stauff.com, commercial customers and users of STAUFF products can not only inform themselves in all detail about the 50000 components Typeically available from stock, but also directly purchase these online without complex registration.

General information about the companies of STAUFF Group, latest business and product news as well as complete global contact details also be available.

Main Functionalities of the STAUFF Digital Platform:

Around the clock
Check stock availability and pricing for STAUFF products in real time

Cross references
Search by article designations of other manufacturers / suppliers

Live chat
Get directly in touch with the STAUFF customer service and sales team

CAD database
Download 3D models and 2D drawings for STAUFF products

Advantages as a Registered User of the STAUFF Digital Platform:

Purchase STAUFF products
Taking customer-specific pricing and delivery conditions into account

Ordering w/o searching
Quick ordering by entering article number, quantity and requested delivery date

File upload
Direct upload of orders with multiple positions in CSV or Excel file format

Notepad function
Create project lists to save interesting products for later

www.stauff.com/cad

Immediate access to and free download of 3D models and 2D drawings for a growing number of STAUFF products

www.filterinterchange.com

Online database for the quick and easy identification and interchange of almost all common brands and Types of replacement filter elements

Follow STAUFF and keep yourself updated:

Linkedin
www.linkedin.com/company/stauff

Youtube
www.youtube.com/stauffgroup

STAUFF Newsletters
Automatic e-mail notifications about latest news from STAUFF
www.stauff.com/newsletter

STAUFF

A

	Level Gauge	**14 - 17**
	SNA	**14**
	SNA/SNK (Special Options)	**15**
	SNK	**16**
	SNKK	**17**
	Accessories / Options	**18 - 21**
	Thermo Switch TS	**18**
	Dial Thermometer with Probe T1 / T2	**18**
	Temperature Sensor TS-SNA / SNK-PT100	**19**
	Temperature Sensor with Direct Installation Set TS-SNA / SNK-PT100-T	**19**
	Anti-Drain Valve SDV-SNA / SNK	**20**
	Deutsch Adaptor Cable DT04-4P	**20**
	Level-Temperature Switch SLTS	**21**

A

Level Gauge Type SNA

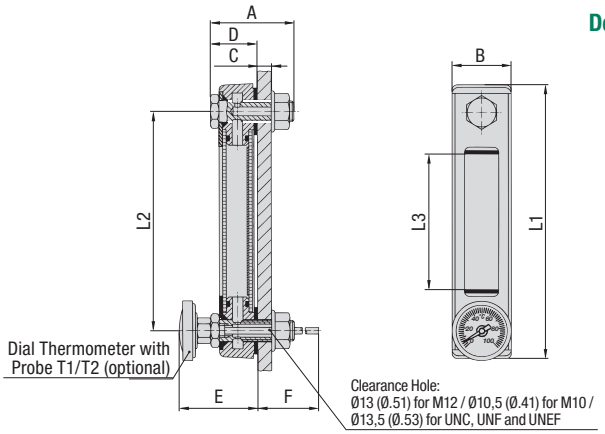

Design of Scale Plates

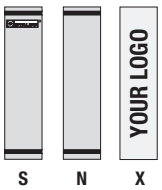

Thermometer Options

Capillary Tube Thermometer
with a dual Celsius / Fahrenheit scale up to +80 °C / +180 °F

Characteristics

Visual fluid level indication in hydraulic reservoirs with maximum tank pressures not exceeding 2 bar / 29 PSI

Nominal Sizes and Designs

- 7 nominal sizes from 76 mm / 2.99 in to 381 mm / 15.00 in
- Display either undivided (SNA-076 ... 176) or subdivided by strut(s) into 2 (SNA-254) or 3 sections (SNA-305 and SNA-381)

Please see page 15 for alternative nominal sizes and designs.

Media Compatibility

- Suitable for use with mineral and petroleum based hydraulic fluids (HL and HLP)

Materials

- Housing made of Steel St 12, black powder-coated
- Sight tube and plugs made of Polyamide (PA)
- Seals made of NBR (Buna-N®)
- Scale plate made of PVC

For the individual components of the level gauge (sight glass, housing, Seals, bolts), alternative materials for improved UV or chemical resistance, low-temperature applications down to -50°C / -58 °F and use with special media (such as bio-degradable fluids, diesel oils, gasolines) are available on request.

Technical Data

- IP 65 protection rating: Dust tight and protected against water jets
- Operating temperature range: -30 °C ... +80 °C / -22 °F ... +176 °F
- Recommended tightening torque: 8 N·m / 5.9 ft·lb

Accessories / Options

- Red / blue capillary tube thermometers with a temperature display range of up to +80 °C / +180 °F
- Dial thermometers with probe and a Celsius or a dual Celsius / Fahrenheit scale with a temperature display range of up to +100 °C / +200 °F
- Thermo Switches
- Temperature Sensors
- Floating Ball
- Deutsch Adaptor Cable

Please see pages 18 / 19 / 20 for details.

Dimensions

Maximum admissible tolerance for the bolt center spacing (dimension L2) according to DIN ISO 2768-f: ±0,20 mm / .008 in for all nominal sizes.

Nominal Size	Dimensions (mm/in)									
	A	B	C (Max.)	D	E	F (with T1)	F (with T2)	L1	L2	L3
SNA-076	45	34,5	8	28	43,5	165,5	265,5	108	76	31
	1.77	1.36	.32	1.10	1.71	6.52	10.45	4.25	2.99	1.22
SNA-127	45	34,5	8	28	43,5	165,5	265,5	159	127	76
	1.77	1.36	.32	1.10	1.71	6.52	10.45	6.26	5.00	2.99
SNA-150	45	34,5	8	28	43,5	165,5	265,5	182	150	99
	1.77	1.36	.32	1.10	1.71	6.52	10.45	7.17	5.91	3.90
SNA-176	45	34,5	8	28	43,5	165,5	265,5	208	176	124
	1.77	1.36	.32	1.10	1.71	6.52	10.45	8.19	6.93	4.88
SNA-254	45	34,5	8	28	43,5	165,5	265,5	286	254	192
	1.77	1.36	.32	1.10	1.71	6.52	10.45	11.26	10.00	7.56
SNA-305	45	34,5	8	28	43,5	165,5	265,5	337	305	244
	1.77	1.36	.32	1.10	1.71	6.52	10.45	13.27	12.00	9.61
SNA-381	45	34,5	8	28	43,5	165,5	265,5	413	381	319
	1.77	1.36	.32	1.10	1.71	6.52	10.45	16	15	12.56

Order Codes

SNA	-	127	-	B	-	S	-	O	-	12	-	O	-	60
①		②		③		④		⑤		⑥		⑦		⑧

① Type

Level Gauge with visual fluid level indication	**SNA**

② Nominal Size

SNA-076 (nominal size of 76 mm / 2.99 in)	**076**
SNA-127 (nominal size of 127 mm / 5.00 in)	**127**
SNA-150 (nominal size of 150 mm / 5.91 in)	**150**
SNA-176 (nominal size of 176 mm / 6.93 in)	**176**
SNA-254 (nominal size of 254 mm / 10.00 in)	**254**
SNA-305 (nominal size of 305 mm / 12.00 in)	**305**
SNA-381 (nominal size of 381 mm / 15.00 in)	**381**

Please see page 15 for alternative nominal sizes.

③ Sealing Material

NBR (Buna-N®) (standard option)	**B**
FKM (Viton®)	**V**

④ Design of Scale Plate

With STAUFF logo (standard option)	**S**
Neutral design without any logo	**N**
Custom-designed scale plate (please specify)	**X**

⑤ Thermometer Option

Supplied without thermometer (standard option)	**O**
Red Capillary Tube thermometer on scale plate	**T**
Blue Capillary Tube thermometer on scale plate	**TB**
Dial thermometer with probe (200 mm / 7.87 in) and a Celsius scale up to 100 °C	**T1C**
Dial thermometer with probe (300 mm / 11.81 in) and a Celsius scale up to 100 °C	**T2C**
Dial thermometer with probe (200 mm / 7.87 in) and a dual scale up to 100 °C / 200 °F	**T1CF**
Dial thermometer with probe (300 mm / 11.81 in) and a dual scale up to 100 °C / 200 °F	**T2CF**

⑥ Banjo Bolt Size

Metric ISO thread M12 (standard option)	**12**
Metric ISO thread M10	**10**
Unified coarse thread 1/2–13 UNC	**U1**
Unified fine thread 1/2–20 UNF	**U2**
Unified extra-fine thread 1/2–28 UNEF	**U3**

⑦ Thermo Switch / Temperature Sensor / Anti-Drain Valve Option

Supplied without Thermo Switch / Temperature Sensor / Anti-Drain Valve	**-**
Thermo Switch TS-SNA/SNK; Break contact (normally closed); Equipped with standard connector	**O**
Thermo Switch TS-SNA/SNK; Break contact (normally closed); Equipped with connector M12	**OD**
Thermo Switch TS-SNA/SNK; Make contact (normally open); Equipped with standard connector	**C**
Thermo Switch TS-SNA/SNK; Make contact (normally open); Equipped with connector M12	**CD**
Temperature Sensor TS-SNA/SNK-PT100; Equipped with connector M12	**PT100**
Anti-Drain Valve Set A	**DA**
Anti-Drain Valve Set B	**DB**

Thermo Switches / Temperature Sensors only available for banjo bolt size M12. Please see pages 18 to 20 for details.

⑧ Switching Temperature

Contact switches at +60 °C / +140 °F	**60**
Contact switches at +70 °C / +158 °F	**70**
Contact switches at +80 °C / +176 °F	**80**
Contact switches at +90 °C / +194 °F	**90**

Only to be indicated when using a Thermo Switch.

Options T1C/CF and T2C/CF are not available for banjo bolt size M10. When using a dial thermometer with probe and a thermo switch at the same time, ensure that both protrude into the oil. A combination is only possible when using the two screw-on positions.
Please see page 18 for details.

Dimensional drawings: All dimensions in mm (in).

Level Gauge (Special Options) Type SNA/SNK

Characteristics

Visual fluid level indication in hydraulic reservoirs with maximum tank pressures not exceeding 2 bar / 29 PSI; ideal for custom applications in terms of reservoir capacities and dimensions

Nominal Sizes

- Special sizes beyond the normal of 305 mm / 12 in up to a maximum nominal size of 950 mm / 37.4 in – even for small and medium quantities
- High-precision manufacturing within 1 mm tolerance to customer requirements

Design

- Robust design thanks to one or more struts that subdivide the display into 2 or more sections
- Positioning of the strut(s) based on engineering considerations and/or according to particular customer requirements
- Precise visual indication of the fluid level by use of scale plates (only available for nominal sizes smaller than 670 mm / 26.4 in) or by use of a coloured Floating Ball (recommended option for nominal sizes larger than 670 mm / 26.4 in)
- Plastic dampening clips to reduce vibration of the sight tube are used for nominal sizes larger than 450 mm / 17.7 in

Materials

Depending on the specific application, several different materials are available for the individual components of the level gauge (sight glass, housing, Seals, bolts); please see Inquiry Checklist for details.

STAUFF is always at your service if you need support in choosing the right materials or material combination for improved UV or chemical resistance or for low-temperature applications down to -50°C / -58 °F and use with special media (such as bio-degradable fluids, diesel oils, gasolines).

Accessories / Options

- Red / blue capillary tube thermometers with a temperature display range of up to +80 °C / +180 °F
- Dial thermometers with probe and a Celsius or a dual Celsius / Fahrenheit scale with a temperature display range of up to +100 °C / +200 °F
- Thermo switches
- Temperature sensors
- Anti-Drain Valve
- Deutsch Adaptor Cable

Please see pages 18 / 19 / 20 for details.

Inquiry Checklist

In case that you require a special property or custom-designed level gauge, please use this checklist to provide us with details. If necessary, please also include further details, like the Type of fluid in use, its temperature and viscosity.

Nominal Size ☐ Bolt centre distance (in mm)

Housing Material ☐ Aluminium ☐ Steel ☐ Stainless Steel

Housing Design ☐ Regular housing design with positioning of strut(s) based on engineering considerations

Please provide additional details / drawing for custom housing designs.

Banjo Bolt Size ☐ M12 ☐ M10 ☐ 1/2–13 UNC ☐ 1/2–20 UNF ☐ 1/2–28 UNEF

Banjo Bolt Material ☐ Steel ☐ Stainless Steel

Sealing Material ☐ NBR (Buna-N®) ☐ FKM (Viton®) ☐ EPDM

Alternative sealing materials to be defined separately.

Level Indication ☐ Scale plate (only for nominal sizes smaller than 670 mm / 26.4 in)

- ☐ Scale plate made of PVC
- ☐ Scale plate made of Aluminium
- ☐ With STAUFF logo
- ☐ Neutral design without any logo
- ☐ Custom-design (please specify)

- ☐ Without thermometer on scale plate
- ☐ Capillary tube thermometer with dual Celsius / Fahrenheit scale up to +80 °C / +180 °F

☐ Floating Ball (recommended option for nominal sizes larger than 670 mm / 26.4 in)

Other Types of level indication (magnetic floats, etc.) to be defined separately.

Options ☐ Dial thermometer with probe

- ☐ Celsius scale up to +100 °C
- ☐ Dual scale up to +100 °C / +200 °F
- ☐ Length of probe: 200 mm / 7.87 in
- ☐ Length of probe: 300 mm / 11.81 in

☐ Thermo Switch TS-SNA/SNK

- ☐ Break contact; Standard connector
- ☐ Break contact; Connector M12
- ☐ Make contact; Standard connector
- ☐ Make contact; Connector M12
- ☐ Contact switches at +60 °C / +140 °F
- ☐ Contact switches at +70 °C / +158 °F
- ☐ Contact switches at +80 °C / +176 °F
- ☐ Contact switches at +90 °C / +194 °F

☐ Temperature Sensor TS-SNA/SNK-PT100 ☐ Deutsch Adaptor Cable

☐ Anti-Drain Valve ☐ Set A ☐ Set B

Also available:

Level Gauges ▪ Type SNK in Special Lengths

Visual / electrical fluid level indication in hydraulic reservoirs with level gauges up to a maximum nominal size of 950 mm / 37.4 in.

Please do not hesitate to contact STAUFF for further details.

A

Level Gauge
Type SNK

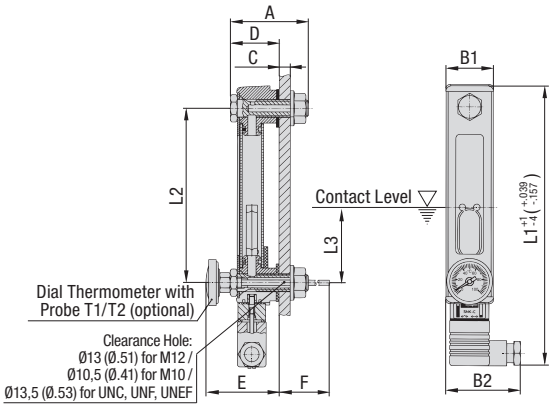

Connection Details and Electrical Functions

Types C and O: Industrial standard connector (contact gap: 11 mm / .43 in), similar to DIN EN 175301-803-B / ISO 6952

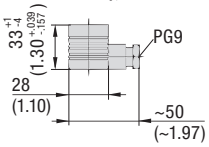

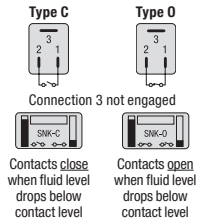

Types CD and OD: Five-pin circular connector M12, A-coded, according to IEC 61076-2-101

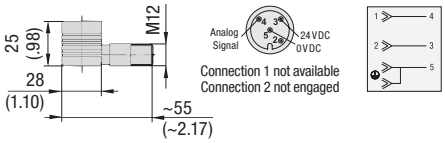

Characteristics

Visual / electrical fluid level indication in hydraulic reservoirs with maximum tank pressures not exceeding 2 bar / 29 PSI

Nominal Sizes and Designs

- 6 nominal sizes from 127 mm / 5.00 in to 381 mm / 15.00 in
- Display either undivided (SNK-127 ... 176) or subdivided by strut(s) into 2 (SNK-254) or 3 sections (SNK-305 and SNK-381)

Media Compatibility

- Suitable for use with mineral and petroleum based hydraulic fluids (HL and HLP)

Materials

- Housing made of Aluminium, black powder-coated
- Sight tube and plugs made of Polyamide (PA)
- Float made of Polyamide (PA)
- Seals made of FKM (Viton®)

For the individual components of the level gauge (sight glass, housing, Seals, bolts), alternative materials for improved UV or chemical resistance, low-temperature applications down to -50°C / -58 °F and use with special media (such as bio-degradable fluids, diesel oils, gasolines) are available on request.

Electrical Specifications

- Magnetic float activates switch when fluid level drops below contact level within 60 mm / 2.36 in of lower banjo bolt
- Available as a break contact (normally closed) or make contact (normally open)
- Either equipped with industrial standard connector (Types C / O) or five-pin circular connector M12 (Types CD / OD)
- Direction of the electrical contact box (right / left) can be chosen when assembling the electrical contacts (Types C / D) or is right by default (Types CD / OD)
- Contact ratings: max. 10 W (Types C / CD) or 5 W (Types O / OD)
- Switching voltage: max. 50 VAC/DC
- Switching current: max. 0,25 A

Technical Data

- IP 65 protection rating: Dust tight and protected against water jets (IP 67 on request)
- Operating temperature range: -30 °C ... +80 °C / -22 °F ... +176 °F
- Recommended tightening torque: 8 N·m / 5.9 ft·lb
- Minimum lateral distance to other magnetic components and cables: 10 mm / .39 in

Accessories / Options

- Dial thermometers with probe and a Celsius or a dual Celsius / Fahrenheit scale with a temperature display range of up to +100 °C / +200 °F
- Thermo Switches
- Temperature Sensors
- Deutsch Adaptor Cable

Please see pages 18 / 19 / 20 for details.

Dimensional drawings: All dimensions in mm (in).

Dimensions

Table shows dimension L1 for the version with industrial standard connector (Types C and O) only.
Maximum admissible tolerance for the bolt center spacing (dimension L2) according to DIN ISO 2768-f: ±0,20 mm / .008 in for all nominal sizes.

Nominal Size	Dimensions (mm/in)										
	A	B1	B2	C (Max.)	D	E	F (with T1)	F (with T2)	L1	L2	L3
SNK-127	56	34,5	~50	8	35,1	51,5	157,5	257,5	205	127	~60
	2.20	1.36	~1.97	.32	1.26	2.03	6.20	10.14	8.07	5.00	~2.36
SNK-150	56	34,5	~50	8	35,1	51,5	157,5	257,5	228	150	~60
	2.20	1.36	~1.97	.32	1.26	2.03	6.20	10.14	8.98	5.91	~2.36
SNK-176	56	34,5	~50	8	35,1	51,5	157,5	257,5	254	176	~60
	2.20	1.36	~1.97	.32	1.26	2.03	6.20	10.14	10.00	6.93	~2.36
SNK-254	56	34,5	~50	8	35,1	51,5	157,5	257,5	332	254	~60
	2.20	1.36	~1.97	.32	1.26	2.03	6.20	10.14	13.07	10.00	~2.36
SNK-305	56	34,5	~50	8	35,1	51,5	157,5	257,5	383	305	~60
	2.20	1.36	~1.97	.32	1.26	2.03	6.20	10.14	15.08	12.00	~2.36
SNK-381	56	34,5	~50	8	35,1	51,5	157,5	257,5	459	381	~60
	2.20	1.36	~1.97	.32	1.26	2.03	6.20	10.14	18.07	15	~2.36

Order Codes

SNK - 127 - V - C - O - 12 - O - 60

① ② ③ ④ ⑤ ⑥ ⑦ ⑧

① Type

Level Gauge with visual / electrical fluid level indication	SNK

② Nominal Size

SNK-127 (nominal size of 127 mm / 5.00 in)	127
SNK-150 (nominal size of 150 mm / 5.91 in)	150
SNK-176 (nominal size of 176 mm / 6.93 in)	176
SNK-254 (nominal size of 254 mm / 10.00 in)	254
SNK-305 (nominal size of 305 mm / 12.00 in)	305
SNK-381 (nominal size of 381 mm / 15.00 in)	381

Contact STAUFF for alternative nominal sizes and designs.

③ Sealing Material

FKM (Viton®)	V

④ Electrical Function

Break contact, opens at contact level (normally closed); Equipped with standard connector	O
Break contact, opens at contact level (normally closed); Equipped with connector M12	OD
Make contact, closes at contact level (normally open); Equipped with standard connector	C
Make contact, closes at contact level (normally open); Equipped with connector M12	CD

⑤ Thermometer Option

Supplied without thermometer (standard option)	O
Dial thermometer with probe (200 mm / 7.87 in) and a Celsius scale up to 100 °C	T1C
Dial thermometer with probe (300 mm / 11.81 in) and a Celsius scale up to 100 °C	T2C
Dial thermometer with probe (200 mm / 7.87 in) and a dual scale up to 100 °C / 200 °F	T1CF
Dial thermometer with probe (300 mm / 11.81 in) and a dual scale up to 100 °C / 200 °F	T2CF

⑥ Banjo Bolt Size

Metric ISO thread M12 (standard option)	12
Metric ISO thread M10	10
Unified coarse thread 1/2–13 UNC	U1
Unified fine thread 1/2–20 UNF	U2
Unified extra-fine thread 1/2–28 UNEF	U3

⑦ Thermo Switch / Temperature Sensor / Anti-Drain Valve Option

Supplied without Thermo Switch / Temperature Sensor / Anti-Drain Valve	-
Thermo Switch TS-SNA/SNK; Break contact (normally closed); Equipped with standard connector	O
Thermo Switch TS-SNA/SNK; Break contact (normally closed); Equipped with connector M12	OD
Thermo Switch TS-SNA/SNK; Make contact (normally open); Equipped with standard connector	C
Thermo Switch TS-SNA/SNK; Make contact (normally open); Equipped with connector M12	CD
Temperature Sensor TS-SNA/SNK-PT100; Equipped with connector M12	PT100
Anti-Drain Valve Set A	DA
Anti-Drain Valve Set B	DB

Thermo Switches / Temperature Sensors only available for banjo bolt size M12. Please see pages 18 to 20 for details.

⑧ Switching Temperature

Contact switches at +60 °C / +140 °F	60
Contact switches at +70 °C / +158 °F	70
Contact switches at +80 °C / +176 °F	80
Contact switches at +90 °C / +194 °F	90

Only to be indicated when using a Thermo Switch.

Options T1C/CF and T2C/CF are not available for banjo bolt size M10. When using a dial thermometer with probe and a thermo switch at the same time, ensure that both protrude into the oil. A combination is only possible when using the two screw-on positions.
Please see page 18 for details.

Level Gauge (Compact Design) Type SNKK

Connection Details and Electrical Functions

Type DD: Five-pin circular connector M12, A-coded, according to IEC 61076-2-101

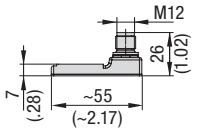

1 Contact opens and 1 contact closes when fluid level drops below contact level

Pin assignment at empty reservoir (default setting at point of delivery)

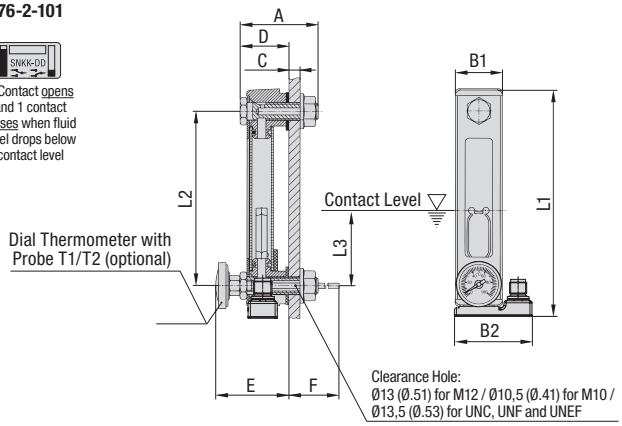

–40 mm / –1.57 in in comparison with Level Gauges SNK

Dimensions

Maximum admissible tolerance for the bolt center spacing (dimension L2) according to DIN ISO 2768-f: ±0,20 mm / .008 in for all nominal sizes.

Nominal Size	Dimensions (mm/in)										
	A	B1	B2	C (Max.)	D	E	F (with T1)	F (with T2)	L1	L2	L3
SNKK-127	56	34,5	~55	8	35,1	51,5	157,5	257,5	165	127	~60
	2.20	1.36	~2.17	.32	1.26	2.03	6.20	10.14	6.50	5.00	~2.36
SNKK-150	56	34,5	~55	8	35,1	51,5	157,5	257,5	188	150	~60
	2.20	1.36	~2.17	.32	1.26	2.03	6.20	10.14	8.98	5.91	~2.36
SNKK-176	56	34,5	~55	8	35,1	51,5	157,5	257,5	214	176	~60
	2.20	1.36	~2.17	.32	1.26	2.03	6.20	10.14	8.43	6.93	~2.36
SNKK-254	56	34,5	~55	8	35,1	51,5	157,5	257,5	292	254	~60
	2.20	1.36	~2.17	.32	1.26	2.03	6.20	10.14	11.50	10.00	~2.36
SNKK-305	56	34,5	~55	8	35,1	51,5	157,5	257,5	343	305	~60
	2.20	1.36	~2.17	.32	1.26	2.03	6.20	10.14	13.50	12.00	~2.36
SNKK-381	56	34,5	~55	8	35,1	51,5	157,5	257,5	343	381	~60
	2.20	1.36	~2.17	.32	1.26	2.03	6.20	10.14	13.50	15	~2.36

Order Codes

SNKK - 127 - V - DD - O - 12 - O - 60

① ② ③ ④ ⑤ ⑥ ⑦ ⑧

① Type

Level Gauge with visual / electrical fluid level indication (compact design)	**SNKK**

② Nominal Size

SNKK-127 (nominal size of 127 mm / 5.00 in)	**127**
SNKK-150 (nominal size of 150 mm / 5.91 in)	**150**
SNKK-176 (nominal size of 176 mm / 6.93 in)	**176**
SNKK-254 (nominal size of 254 mm / 10.00 in)	**254**
SNKK-305 (nominal size of 305 mm / 12.00 in)	**305**
SNKK-381 (nominal size of 381 mm / 15.00 in)	**381**

Contact STAUFF for alternative nominal sizes and designs.

③ Sealing Material

FKM (Viton®)	**V**

④ Electrical Function

SPDT (Single Pole Double Throw) contacts, 1 contact opens and 1 contact closes at contact level; Equipped with connector M12	**DD**

⑤ Thermometer Option

Supplied without thermometer (standard option)	**O**
Dial thermometer with probe (200 mm / 7.87 in) and a Celsius scale up to 100 °C	**T1C**
Dial thermometer with probe (300 mm / 11.81 in) and a Celsius scale up to 100 °C	**T2C**
Dial thermometer with probe (200 mm / 7.87 in) and a dual scale up to 100 °C / 200 °F	**T1CF**
Dial thermometer with probe (300 mm / 11.81 in) and a dual scale up to 100 °C / 200 °F	**T2CF**

⑥ Banjo Bolt Size

Metric ISO thread M12 (standard option)	**12**
Metric ISO thread M10	**10**
Unified coarse thread 1/2–13 UNC	**U1**
Unified fine thread 1/2–20 UNF	**U2**
Unified extra-fine thread 1/2–28 UNEF	**U3**

⑦ Thermo Switch / Temperature Sensor / Anti-Drain Valve Option

Supplied without Thermo Switch / Temperature Sensor / Anti-Drain Valve	**-**
Break Contact, opens at contact level (normally closed); Equipped with standard connector	**O**
Break Contact, opens at contact level (normally closed); Equipped with connector M12	**OD**
Make Contact, closes at contact level (normally open); Equipped with standard connector	**C**
Make Contact, closes at contact level (normally open); Equipped with connector M12	**CD**
Temperature Sensor TS-SNA/SNK-PT100; Equipped with connector M12	**PT100**
Anti-Drain Valve Set A	**DA**
Anti-Drain Valve Set B	**DB**

Thermo Switches / Temperature Sensors only available for banjo bolt size M12. Please see pages 18 to 20 for details.

⑧ Switching Temperature

Contact switches at +60 °C / +140 °F	**60**
Contact switches at +70 °C / +158 °F	**70**
Contact switches at +80 °C / +176 °F	**80**
Contact switches at +90 °C / +194 °F	**90**

Only to be indicated when using a Thermo Switch.

Options T1C/CF and T2C/CF are not available for banjo bolt size M10 and not be used in conjunction with Thermo Switches or Temperature Sensors. Please see page 18 for details.

Dimensional drawings: All dimensions in mm (in).

Characteristics

Visual / electrical fluid level indication in hydraulic reservoirs with maximum tank pressures not exceeding 2 bar / 29 PSI; ideal for applications in which space is limited

Nominal Sizes and Designs

- 6 nominal sizes from 127 mm / 5.00 in to 381 mm / 15.00 in
- Compact design allows space-saving installation: Always 40 mm / 1.57 in shorter than Level Gauges SNK of the comparable nominal size
- Display either undivided (SNKK-127 ... 176) or subdivided by strut(s) into 2 (SNKK-254) or 3 sections (SNKK-305 and SNKK-381)

Media Compatibility

- Suitable for use with Mineral and Petroleum based hydraulic fluids (HL and HLP)

Materials

- Housing made of Aluminium, black powder-coated
- Sight tube and plugs made of Polyamide (PA)
- Float made of Polypropylene (PP)
- Seals made of FKM (Viton®)

For the individual components of the level gauge (sight glass, housing, Seals, bolts), alternative materials for improved UV or chemical resistance, low-temperature applications down to -50°C / -58 °F and use with special media (such as bio-degradable fluids, diesel oils, gasolines) are available on request.

Electrical Specifications

- Magnetic float activates switch when fluid level drops below contact level within 60 mm / 2.36 in of lower banjo bolt
- Available as a SPDT (Single Pole Double Throw) contact
- Equipped with five-pin circular connector M12 or Deutsch connector
- Direction of the electrical contact box is right to top by default

Technical Data

- IP 67 protection rating: Dust tight and protected against powerful water jets; even immersion (up to 1 m / 3.28 ft) in water is possible under defined conditions of pressure and time (IP 69K on request)
- Operating temperature range: -30 °C ... +80 °C / -22 °F ... +176 °F
- Recommended tightening torque: 8 N·m / 5.9 ft·lb
- Minimum lateral distance to other magnetic components and cables: 10 mm / .39 in

Accessories / Options

- Dial thermometers with probe and a Celsius or a dual Celsius / Fahrenheit scale with a temperature display range of up to +100 °C / +200 °F
- Thermo Switches
- Temperature Sensors
- Deutsch Adaptor Cable

Please see pages 18 / 19 / 20 for details.

A

Thermo Switch
Type TS

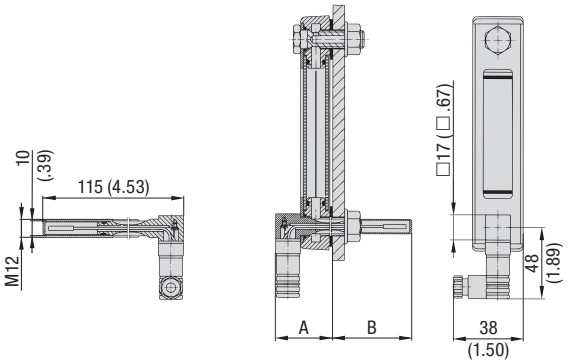

Connection Details and Electrical Functions

Types C and O: Industrial standard connector (contact gap: 9,4 mm / .37 in), similar to DIN EN 175301-803-C / ISO 6952

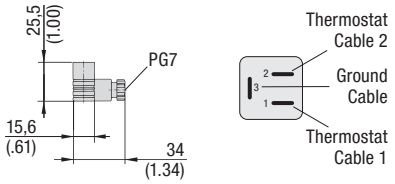

Types CD and OD: Five-pin circular connector M12, A-coded, according to IEC 61076-2-101

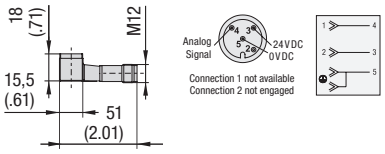

Characteristics

Fluid temperature measurement in conjunction with STAUFF Level Gauges SNA, SNK and SNKK

Installation
- Replaces the lower banjo bolt of the Level Gauge
- Available for bolt size M12 only
- Clearance hole: Ø13 mm / Ø.51 in

Materials
- Metal parts made of Stainless Steel (1.4305)
- Plastic parts made of glass-fibre reinforced Polyamide (PA)

Electrical Specifications (General)
- Thermo switch is activated when the fluid temperature reaches the respective switching temperature
- Available with switching temperatures of +60 °C / +140 °F, +70 °C / +158 °F, +80 °C / +176 °F or +90 °C / +194 °F (with a switching tolerance of ±5 °C / ±9 °F and a hysteresis of 35 °C / 63 °F)
- Available as a break contact (normally closed) or make contact (normally open)
- Either equipped with industrial standard connector (Types C / O) or five-pin circular connector M12 (Types CD / OD)
- Thermo switch can be rotated by 360° to its final direction

Dimensions

	Dimensions (mm/in) A	B
In conjunction with Level Gauge **SNA**	39	76
	1.54	2.99
In conjunction with Level Gauge **SNK**	47	68
	1.85	2.68
In conjunction with Level Gauge **SNKK**	47	68
	1.85	2.68

Electrical Specifications (Alternating Current)
- Maximum voltage: 250 V, 2,5 (1,6) A, 50 Hz
- Maximum current at 2000 operations: 4,0 A at cos φ = 4,45 / 250 V, 135 °C
- Maximum current at 10000 operations: 2,5 A at cos φ = 1,00 / 250 V, 150 °C
- Minimum current: 20 mA

Electrical Specifications (Direct Current)
- Maximum voltage: 42 V

Accessories / Options
- Deutsch Adaptor Cable

Please see page 20 for details.

Order Codes

TS-SNA/SNK - O - 60

① ② ③

① Type

Thermo Switch TS for use with Level Gauges SNA, SNK and SNKK	**TS-SNA/SNK**

② Electrical Function

Break contact, opens at switching temperature (normally closed); Equipped with standard connector	**O**
Break contact, opens at switching temperature (normally closed); Equipped with connector M12	**OD**
Make contact, closes at switching temperature (normally open); Equipped with standard connector	**C**
Make contact, closes at switching temperature (normally open); Equipped with connector M12	**CD**

③ Switching Temperature

Contact switches at +60 °C / +140 °F	**60**
Contact switches at +70 °C / +158 °F	**70**
Contact switches at +80 °C / +176 °F	**80**
Contact switches at +90 °C / +194 °F	**90**

Dial Thermometer with Probe
Types T1/T2

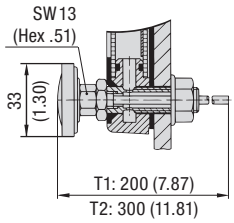

Characteristics

Visual fluid temperature measurement in conjunction with STAUFF Level Gauges SNA, SNK and SNKK

Nominal Sizes and Designs
- Probe lengths of 200 mm / 7.87 in or 300 mm / 11.81 in
- Scale diameter of 33 mm / 1.30 in

Please contact STAUFF for special versions.

Scale Options
- Celsius scale of 0°C ... +100 °C
- Dual Celsius / Fahrenheit scale of up to +100 °C / +200 °F

Materials
- Probe made of Stainless Steel V4A (1.4571)

Technical Data
- IP 65 protection rating: Dust tight and protected against water jets

Installation
- Requires a special banjo bolt (with internal M8 port for the dial thermometer with probe) to replace the lower standard banjo bolt of the Level Gauge
- Use suitable wrench SW 13 (Hex .51) to fasten; turning on the body itself may damage the product

Please note that Dial Thermometers with Probe can only be ordered in conjunction with Level Gauges SNA, SNK and SNKK. Please see page 14 to 17 for details.

Dimensional drawings: All dimensions in mm (in).

Temperature Sensor
Type TS-SNA/SNK-PT100

Connection Details and Electrical Functions

Four-pin circular connector M12, A-coded, according to IEC 61076-2-101

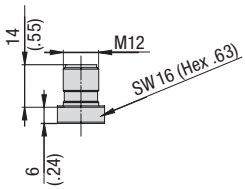

Pin Assignment

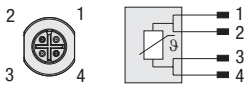

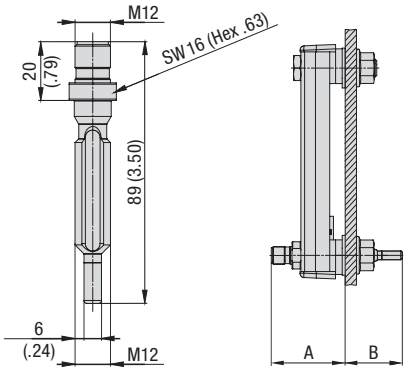

Order Codes

TS-SNA/SNK-PT100

①

① Type

Temperature Sensor PT100	**TS-SNA/SNK-PT100**

Dimensions

	Dimensions (mm/in) A	B
In conjunction with Level Gauge **SNA**	43,5	45,5
	1.71	1.79
In conjunction with Level Gauge **SNK**	51	38
	2.01	1.50
In conjunction with Level Gauge **SNKK**	51	38
	2.01	1.50

Technical Data

- Operating temperature range (for the connector area): -25 °C ... +80 °C / -13 °F ... +176 °F
- IP 68 protection rating: Dust tight and protected against powerful water jets; even immersion (beyond 1 m / 3.28 ft) in water is possible under defined conditions of pressure and time

Accessories / Options

- Deutsch Adaptor Cable

Please see page 20 for details.

Characteristics

Fluid temperature measurement in conjunction with STAUFF Level Gauges SNA, SNK and SNKK; Analysis of signals with required equipment, simply connect to your on board control unit or PLC.

Installation

- Replaces the lower banjo bolt of the Level Gauge
- Available for bolt size M12 only
- Clearance hole: Ø13 mm / Ø.51 in

Materials

- Metal parts (including all fluid-affected parts) made of Stainless Steel V2A (1.4305)

Electrical Specifications

- Measuring temperature range: -40 °C ... +150 °C / -40 °F ... +302 °F
- Platinum measuring element PT100 according to DIN EN 60751, class A
- Accuracy: ±(0,15 K + 0,002 x |t|)
- Max. contact current: 2,0 mA
- Equipped with four-pin circular connector M12 with gold-plated contacts
- Power supply 20...32V DC

Temperature Sensor with Direct Installation Set
Type TS-SNA/SNK-PT100-T

Order Codes

TS-SNA/SNK-PT100 - T - B

① ② ③

① Type

Temperature Sensor PT100	**TS-SNA/SNK-PT100**

② Direct Adaptor

Direct installation set including M12 screw nut, gasket, front ring and O-ring	**T**

③ Sealing Material

NBR (Buna-N®) (standard option)	**B**
FKM (Viton®)	**V**
EPDM	**E**

The direct installation set can also be used in conjunction with Thermo Switches TS (see page 18). Please contact STAUFF for further information.

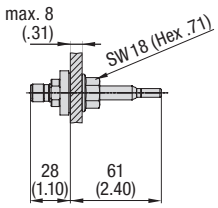

Materials

- Fluid-affected parts made of Stainless Steel V2A (1.4305)
- M12 screw nut made of Steel, zinc-plated
- Front ring made of Stainless Steel V2A (1.4305)
- O-ring and gasket made of NBR (Buna-N®) (standard option), FKM (Viton®) or EPDM

Please see top of this page for Technical Details and Electrical Specifications for the Temperature Sensor.

Accessories / Options

- Deutsch Adaptor Cable

Please see page 20 for details.

Characteristics

Direct fluid temperature measurement without STAUFF Level Gauges SNA, SNK and SNKK; Analysis of signals with required equipment, simply connect to your on board control unit or PLC.

Installation

- Direct installation to the outer wall of the hydraulic reservoir or gearbox
- Compact design and easy installation
- Clearance hole: Ø13 mm / Ø.51 in

Dimensional drawings: All dimensions in mm (in).

A

Anti-Drain Valve
Type SDV-SNA/SNK

Distance Adaptor

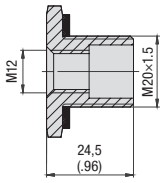

Anti-Drain Valve

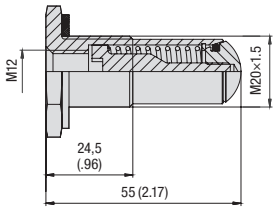

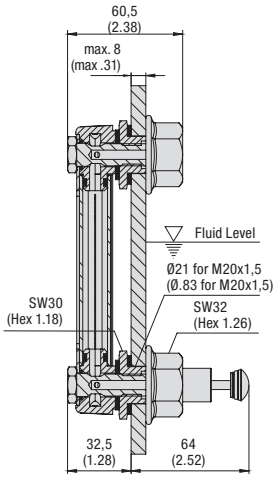

Set A
(Max. fluid level of the hydraulic reservoir between the banjo bolts)

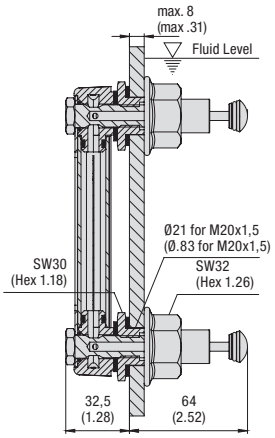

Set B
(Max. fluid level of the hydraulic reservoir above the banjo bolts)

Characteristics

Anti-drain valve to be used in conjunction with banjo bolts of level gauges, allowing these to be removed and replaced quickly and easily without spillage of fluid from the hydraulic reservoir

Features
- Used in conjunction with either the lower or both the lower and the upper banjo bolts of the Level Gauge
- Distance adaptor for the upper banjo bolt available when the check valve is used with the lower banjo bolt only
- Available for bolt size M12 only

Materials
- Housing made of Stainless Steel V2A (1.4301)
- Hexagon head nuts made of Steel, zinc/nickel-plated (Fe/Zn Ni 6)
- Seals made of NBR (Buna-N®)

Contact STAUFF for alternative materials.

Order Codes

SDV-SNA/SNK - M12/M20x1.5 - B - W4 - A

① ② ③ ④ ⑤

① Type

Anti-Drain Valve for use with Level Gauges SNA, SNK and SNKK	**SDV-SNA/SNK**

② Banjo Bolt Size

Metric ISO thread M12	**M12/M20x1.5**

③ Sealing Material

NBR (Buna-N®)	**B**

④ Housing Material

Stainless Steel V2A (1.4301)	**W4**

⑤ Set Type

Anti-drain valve only, including seal, without any additional accessories	**without**
Set A consisting of 1 anti-drain valve to be used with the lower banjo bolt and 1 distance adaptor to be used with the upper banjo bolt	**A**
Set B consisting of 2 anti-drain valves to be used with both banjo bolts	**B**

Deutsch Adaptor Cable
Type DT04-4P

Characteristics

Deutsch adaptor to use for adaption from M12 to Deutsch Plug DT04-4P.

Installation
- Adapts to cable box M12 of SNK
- Adapts to M12 connector of SNKK and TS-SNA/SNK …
- Adapts to M12 connector of TS-SNA/SNK-PT100
- Adapts to any electrical M12 connector in other Stauff series

Technical Data
- IP 68 protection rating: Dust tight and protected against powerful water jets
- Length: 100mm (3.93 in)
- Operating temperature range: -30 °C … +80 °C / -22 °F … +176 °F

Order Codes

EACC-CAB-M12A/5-DT04-4P-0.1

①

① Type

Deutsch Adaptor Cable	**EACC-CAB-M12A/5-DT04-4P-0.1**

Dimensional drawings: All dimensions in mm (in).

Level-Temperature Switch Type SLTS

A

Schemes for float in low position

Wiring Scheme (CB)

two level contacts
one temperature contact

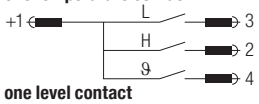

one level contact
one temperature contact

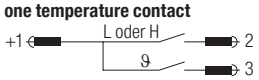

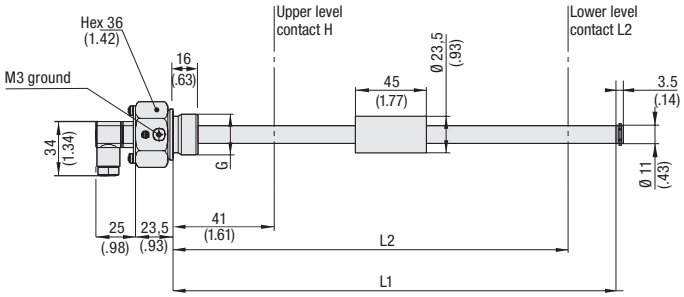

Wiring Scheme (M12)

two level contacts
one temperature contact

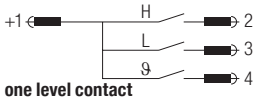

one level contact
one temperature contact

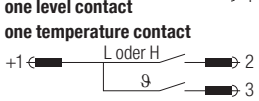

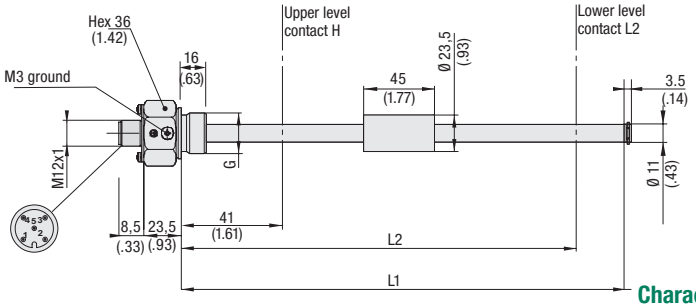

Order Codes

SLTS - 12 - O - H41 - L251 - B12 - G048 - M12

① ② ③ ④ ⑤ ⑥ ⑦ ⑧

① Series and Type

Level-Temperature Switch	**SLTS**

② Stem Length

L1: 305 mm / 12 in L2: 251 mm / 9.88 in	**12**
L1: 457 mm / 18 in L2: 403 mm / 15.87 in	**18**

③ Switching Temperature

Without temperature switch	**0**
+60 °C / +140 °F	**060**
+70 °C / +158 °F	**070**

④ H (Upper Level Contact)

Without upper level contact	**0**
41 mm / 1.61 in	**H41**

⑤ L (Lower Level Contact)

Without lower level contact	**0**
251 mm / 9.88 in (SLTS-12 only)	**L251**
403 mm / 15.87 in (SLTS-18 only)	**L403**

⑥ Thread Connection

G3/4 (standard option)	**B12**
1 NPT	**N16**
Note: Others on request	

⑦ Voltage (Volt AC/DC)

48 Volt max. (standard option)	**G048**
115 Volt max. (for thread N16 only)	**G115**

⑧ Electrical Connection

similar DIN VDE 0627 / IEV 61984	**CB**
M12 pin terminal	**M12**

Characteristics

The STAUFF Level-Temperature Switches (SLTS Series) are unique in their design and modularity. One of the greatest advantages is the ability of the end-user to adjust the switching level. The internal support wire carrying the level and temperature switches makes it a simple and quick job to change the level switch position.

Level contact positions (L, H) are set as given in the order code. They can be adjusted individually later on. Please consider a minimum distance of 40 mm / 1.57 in between the switching points.

Features

- Suitable for Mineral Oil and HFC fluids, other fluids on request
- Either 1 or 2 level contacts available
- 1 integrated temperature switch (optional)
- Standard electrical function:
  Level contacts: Normally closed, opens with falling level
  Temperature contacts: Normally closed, opens with rising temperature

STAUFF Level-Temperature Switches SLTS are available with other electrical functions on request.

Options

- 1 NPT and others availble on request
- max. 115 Volt switching (for thread N16 only)
- Deutsch Adaptor Cable

Please see page 20 for details.

Materials

- Stem: Brass
- Float/Sealing: NBR (Buna-N®)
- Max. operating temp.: +80 °C / +176 °F

Electrical Data and Output

- Max. current level contact: 0.5 A
- Max. current temp. contact: 2.0 A
- Contact load level contact: 10 VA
- Max. operating voltage: (See ordering code)
- Specific gravity of fluid: ≥0,8 kg/dm³
- Hysteresis: +18 °C / +64.4 °F

Protection Rating

- IP 65 protection rating: Dust tight and protected against water jets

Contact Life Time

Due to their design Reed contacts have a very high life expectancy. However, it is worthwhile to note the following information.

Contact Protection

To reduce the high reverse voltage produced when a reed switch opens, the following contact protection can be applied.

- DC voltage: a diode parallel to the load, see figure A
- AC voltage: a RC-network parallel to the load, see figure B and table below

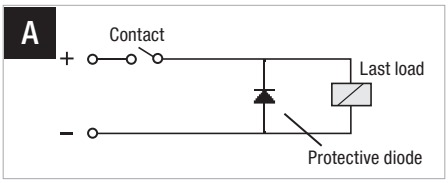

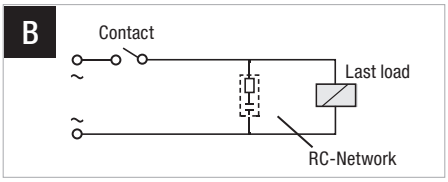

Open contact voltage V	10 VA		25 VA		50 VA		75 VA		100 VA	
	R (Ω)	C (µF)	R (Ω)	C (µF)	R (Ω)	C (µF)	R (Ω)	C (µF)	R (Ω)	C (µF)
24	22	0,022	1	0,1	1	0,47	1	1	1	1
48	120	0,0047	22	0,022	1	0,1	1	0,47	1	0,47
110	470	0,001	120	0,0047	22	22	22	0,047	22	0,1

Dimensional drawings: All dimensions in mm (in).

STAUFF

	Plastic Filler Breather	**24 - 31**
	SPB-1 / 2 / 3 (Threaded Version)	**24**
	SPB-4 / 5 (Flange Version)	**25**
	Accessories / Options Dipsticks / Baskets / Pressurisation	**26**
	Pressure Drop Flow Curves	**27**
	SPBN (Compact Design; Threaded Version)	**28**
	SPBN (Compact Design; Bayonet Version)	**28**
	Accessories / Options / Pressure Drop Flow Curves Dipsticks / Baskets / Pressurisation	**29**
	Plastic Filler Breather Mini SPBM (Threaded Version)	**30**
	SES (Threaded Version)	**31**
	SES (Welded Version)	**31**

	Metal Filler Breather	**32 - 37**
	SMBT-47 (Threaded Version)	**32**
	SMBB-47 (Bayonet Version)	**33**
	SMBT-80 (Threaded Version)	**34**
	SMBB-80 (Bayonet Version)	**35**
	SMBP-80 (Push-On Version)	**36**
	Lockable Metal Filler Breather SMBL (Clamping, Threaded and Push-On Version)	**37**
	Accessories / Options	**38 - 39**
	Side Mount Bracket ASMB-1 (Polyamide Version)	**38**
	Side Mount Bracket ASMB-2 (Aluminium Version)	**38**
	Extended Bayonet Flange EBF	**39**
	Weld Riser WR	**39**

B

B

Plastic Filler Breather Types SPB-1 / 2 / 3 (Threaded Version)

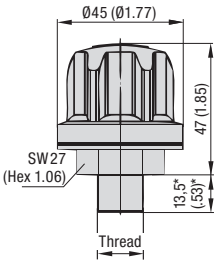

SPB-1

* for thread Type N12: 16,0 (.63)

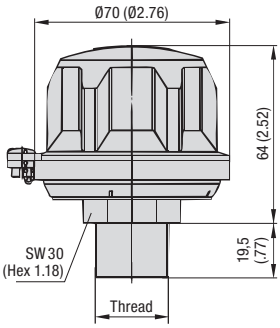

SPB-2

(See page 28 for compact version SPBN)

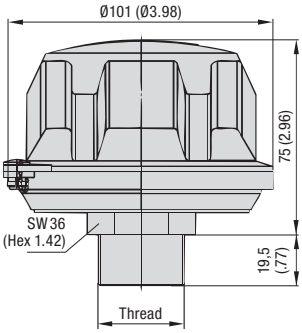

SPB-3

Characteristics

Designed to be used as filler ports for hydraulic reservoirs, allowing the reservoir to breathe whilst protecting it from contamination found in harsh environments

Features

- Available with 3 different cap diameters
- Threaded version, equipped with male BSP thread (ISO 228) or male NPT thread (ANSI B1.20.1)
- Operating temperature range: -40 °C ... +120 °C / -40 °F ... +248 °F

Materials

- Made of non-corrosive materials
- Body and cap made of glass-fibre reinforced Polyamide (PA)
- Seals made of NBR (Buna-N®)

Contact STAUFF for alternative materials.

Accessories / Options

- Pressurisation up to 0,7 bar / 10 PSI (not available for SPB-1)
- Air filter element
- Anti-splash feature
- Plastic dipstick with integrated anti-splash feature
- Plastic dipstick with integrated magnet
- Oil Demister (not available for SPB-1)

Please see pages 26 and 53 for details.

Maximum Air Flow Rate

- 0,15 m^3/min / 5.30 cfm for SPB-1
- 0,40 m^3/min / 14.13 cfm for SPB-2
- 1,00 m^3/min / 35.31 cfm for SPB-3

Please see page 27 for detailed air flow curves.

Installation

- Recommended mounting spaces: Ø48 mm / Ø1.89 in for SPB-1, Ø90 mm / Ø3.54 in for SPB-2, and Ø122 mm / Ø4.80 in for SPB-3

Thread Options

Thread		SPB-1	SPB-2	SPB-3	Code
Male BSP Thread (ISO 228)	G1/4	●	○	○	B04
	G3/8	●	●	○	B06
	G1/2	●	●	●	B08
	G3/4	○	●	●	B12
	G1	○	○	●	B16

Thread		SPB-1	SPB-2	SPB-3	Code
Male NPT Thread (ANSI B1.20.1)	1/4	●	○	○	N04
	3/8	●	○	○	N06
	1/2	●	○	○	N08
	3/4	●	●	●	N12
	1	○	○	●	N16

● Standard Option

Order Codes

SPB - 2 - O - 10 - B12 - O - D200

① ② ③ ④ ⑤ ⑥ ⑦

① Type

Plastic Filler Breather	**SPB**

② Version

Threaded version; Cap diameter Ø45 mm (Ø1.77 in)	**1**
Threaded version; Cap diameter Ø70 mm (Ø2.76 in)	**2**
Threaded version; Cap diameter Ø101 mm (Ø3.98 in)	**3**

③ Pressurisation

Without pressurisation (standard option)	**0**
Pressurised at 0,2 bar / 3 PSI	**B0.2**
Pressurised at 0,35 bar / 5 PSI	**B0.35**
Pressurised at 0,7 bar / 10 PSI	**B0.7**

Type SPB-1 is only available without pressurisation. Please see page 26 for details.

④ Air Filter Element (Material / Micron Rating)

10 µm Foam / PUR (standard option)	**10**
40 µm Foam / PUR	**40**
3 µm Inorganic Glass-Fibre, pleated	**E03**
10 µm Filter Paper, pleated	**L10**

Options E03 and L10 are only available for Type SPB-3. Contact STAUFF for alternative materials / micron ratings.

⑤ Connection Thread (Male)

G1/4 (for SPB-1 only)	**B04**
G3/8 (for SPB-1 and 2 only)	**B06**
G1/2 (for SPB-1, 2 and 3)	**B08**
G3/4 (for SPB-2 and 3 only)	**B12**
G1 (for SPB-3 only)	**B16**
1/4 NPT (for SPB-1 only)	**N04**
3/8 NPT (for SPB-1 only)	**N06**
1/2 NPT (for SPB-1 only)	**N08**
3/4 NPT (for SPB-1, 2 and 3)	**N12**
1 NPT (for SPB-3 only)	**N16**

⑥ Anti-Splash Feature

With anti-splash feature (standard option)	**A**
Without anti-splash feature	**0**

The anti-splash feature for the SPB-1, can only be achieved in conjunction with a dipstick, but is not available for the SPB-1 with connection sizes B04 and N04. Please see page 26 for details.

⑦ Dipstick

Plastic dipstick (200 mm / 7.88 in) with integrated anti-splash feature	**D200**
Plastic dipstick (300 mm / 11.81 in) with integrated anti-splash feature	**D300**
Plastic dipstick (300 mm / 11.81 in) with integrated magnet	**D300M**
Without dipstick	**-**

A shorter dipstick length can be achieved by simply cutting down the total length according to individual requirements. Please see page 26 for details.

Dimensional drawings: All dimensions in mm (in).

Plastic Filler Breather Types SPB-4 / 5 (Flange Version)

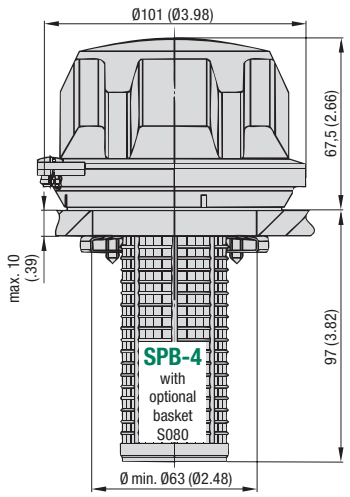

Clamping jaw installation to a single mounting hole

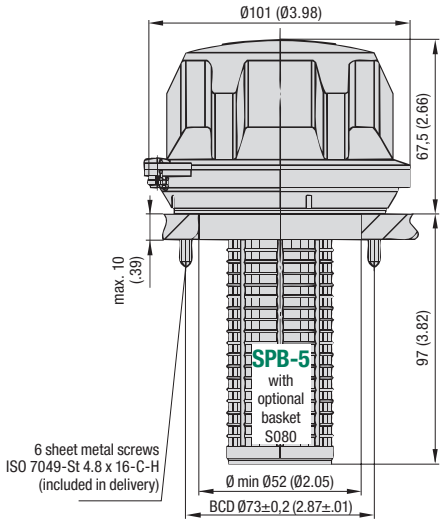

Installation to a six-hole bolt pattern with flange interface similar to DIN 24557, Part 2

Characteristics

Designed to be used as filler ports for hydraulic reservoirs, allowing the reservoir to breathe whilst protecting it from contamination found in harsh environments

Features
- Cap diameter of Ø101 mm / Ø3.98 in
- Either for clamping installation (with 3 clamping jaws and cross-drive screws) or with a six-hole bolt pattern
- Operating temperature range: -40 °C ... +120 °C / -40 °F ... +248 °F

Materials
- Made of non-corrosive materials
- Body and cap made of glass-fibre reinforced Polyamide (PA)
- Seals made of NBR (Buna-N®)

Contact STAUFF for alternative materials.

Accessories / Options
- Plastic basket (800 µm)
- Pressurisation up to 0,7 bar / 10 PSI
- Air filter element
- Anti-splash feature
- Plastic dipstick with integrated anti-splash feature
- Plastic dipstick with integrated magnet

Please see page 26 for details.

Maximum Air Flow Rate
- 1,00 m³/min / 35.31 cfm for SPB-4 / 5

Please see page 27 for detailed air flow curves.

Installation
- Recommended mounting space: Ø122 mm / Ø4.80 in
- Six-hole bolt pattern for flange interfaces similar to DIN 24557, part 2 (Type SPB-5):

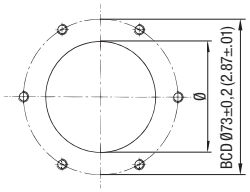

- 6 sheet metal screws (ISO 7049-St 4.8 x 16-C-H) are included in delivery (Type SPB-5); can be replaced by regular M5 socket cap screws (ISO 4762), if required
- Recommended diameters of the screw holes, depending on the sheet thickness of the reservoir (Type SPB-5): Ø4,0 mm / Ø.16 in at a thickness of 1,20 mm / .05 in, Ø4,1 mm / Ø.16 in at a thickness of 2,00 mm / .08 in, Ø4,3 mm / Ø.17 in at a thickness of 4,00 mm / .16 in, and Ø4,4 mm / Ø.17 in at a thickness of 5,00 mm / .20 in

Order Codes

SPB	-	4	-	O	-	10	-	S080	-	A	-	D200
①		②		③		④		⑤		⑥		⑦

① Type

Plastic Filler Breather	**SPB**

② Version

Bayonet version for clamping jaw installation to a single mounting hole; Cap diameter Ø101 mm (Ø3.98 in)	**4**
Bayonet Version with six-hole bolt pattern for flange interfaces similar to DIN 24557, part 2; Cap diameter Ø101 mm (Ø3.98 in)	**5**

③ Pressurisation

Without pressurisation (standard option)	**O**
Pressurised at 0,2 bar / 3 PSI	**B0.2**
Pressurised at 0,35 bar / 5 PSI	**B0.35**
Pressurised at 0,7 bar / 10 PSI	**B0.7**

Please see page 26 for details.

④ Air Filter Element (Material / Micron Rating)

10 µm Foam / PUR (standard option)	**10**
40 µm Foam / PUR	**40**
3 µm Inorganic Glass-Fibre, pleated	**E03**
10 µm Filter Paper, pleated	**L10**

Contact STAUFF for alternative materials / micron ratings.

⑤ Basket Option

Plastic basket (105 mm / 4.13 in)	**S080**
Telescopic plastic basket (max. 205 mm / max. 8.07 in)	**S200**
Plastic basket with flange interface similar to DIN 24557, part 2 (95 mm / 3.74 in)	**S095P**
Without basket	**X**

Option S095P is only available for Type SPB-5.
Please see page 26 for details.

⑥ Anti-Splash Feature

With anti-splash feature (standard option)	**A**
Without anti-splash feature	**O**

⑦ Dipstick

Plastic dipstick (200 mm / 7.88 in) with integrated anti-splash feature	**D200**
Plastic dipstick (300 mm / 11.81 in) with integrated anti-splash feature	**D300**
Plastic dipstick (300 mm / 11.81 in) with integrated magnet	**D300M**
Without dipstick	**-**

A shorter dipstick length can be achieved by simply cutting down the total length according to individual requirements. When choosing a combination of a basket and a dipstick, the dipstick has to be at least 15 mm / .59 in shorter than the basket.
Please see page 26 for details.

Dimensional drawings: All dimensions in mm (in).

B

Plastic Dipstick
Types DS-1 / 2 / 3
Anti-Splash Feature

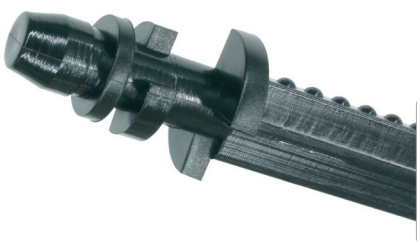

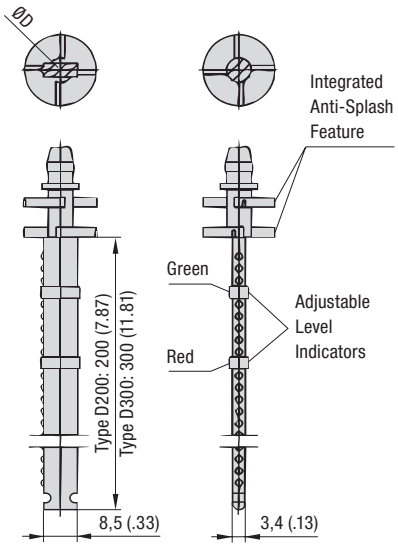

Connection		Code	For Type	Suitable Dipstick*	ØD (mm/in)
Male BSP Thread (ISO 228)	G1/4	B04	SPB-1	Dipstick Option Not Available	
	G3/8	B06	SPB-1/2	DS-1	10 / .39
	G1/2	B08	SPB-1/2/3	DS-2	14 / .55
			SPBM		
	G3/4	B12	SPB-1/2	DS-3	18 / .71
			SMBT-80	DS-1	10 / .39
	G1	B16	SPB-3	DS-3	18 / .71
			SMBT-80	DS-1	10 / .39
Male NPT Thread (ANSI B1.20.1)	1/4	N04	SPB-1	Dipstick Option Not Available	
	3/8	N06	SPB-1	DS-1	10 / .39
	1/2	N08	SPB-1	DS-2	14 / .55
	3/4	N12	SPB-1/2/3	DS-3	18 / .71
			SMBT-80	DS-1	10 / .39
	1	N16	SPB-3	DS-3	18 / .71
			SMBT-80	DS-1	10 / .39
Plastic Basket	S080		SPB-4/5	DS-3	18 / .71
	S095-P		SPB-5	DS-3	18 / .71
	S200		SPB-4/5	DS-3	18 / .71
w/o Basket		X	SPB-4/5	DS-3	18 / .71
			SMBB-80	DS-1	10 / .39

* When ordered seperately, please add the length of the dipstick (in mm) to the ordering code (e.g. DS-2-300).

For all Plastic Filler Breathers (except Type SPB-1 with connection sizes B04 and N04), dipsticks made of Polyamide are available as an option. These dipsticks are available in 2 standard lengths of 200 mm / 7.87 in and 300 mm / 11.81 in and equipped with 2 adjustable level indicators in green and red colour.

A shorter dipstick length can be achieved by simply cutting down the total length according to individual requirements. The markings at 25,4 mm / 1.00 in to assist simply cutting.

All dipsticks have an integrated anti-splash feature protecting the SPB from backspilling fluid and avoiding an early breakdown of the air filter element.

Optionally a powerful magnet collects metal particles from the oil and gives extra safety for your application.

Please note: When choosing a combination of a dipstick and a basket (see below), the dipstick has to be at least 15 mm / .59 in shorter than the basket.

Special designs and alternative materials available on request. Please contact STAUFF for further details.

Plastic Basket ▪ Types S080 / S095-P / S200

For the Plastic Filler Breathers SPB-4 and SPB-5, different Types of baskets are available as an option. All baskets have a reinforced 0,8 x 3,5 mm / .03 x .14 in mesh (800 µm), so that rough dirt particles are filtered out of the medium and a smooth flow into the tank is being ensured.

The **Plastic Basket S080** (length of 105 mm / 4.13 in) snaps into the breather housing and suitable for the SPB-4 and SPB-5.

The **Plastic Basket S095-P** (length of 95 mm / 3.74 in) is equipped with a six-hole bolt pattern with flange interface similar to DIN 24557, part 2. It is suitable for the SPB-5 / SMBB-80 only and is installed between the breather housing and the reservoir.

The **Telescopic Plastic Basket S200** (maximum length of 205 mm / 8.07 in) is ideal to further improve the straining ability and oil flow-through and allowing longer dipstick lengths, where reservoir depth allows. It also snaps into the breather housing and is suitable for the SPB-4 and SPB-5.

Please note: When choosing a combination of a dipstick (see above) and a basket, the dipstick has to be at least 15 mm / .59 in shorter than the basket.

Special designs and alternative materials available on request. Please contact STAUFF for further details.

Plastic Basket
S080 (for SPB-4/5)
Material: Polypropylene (PP)

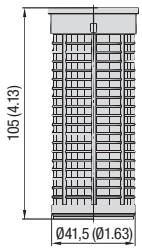

Plastic Basket
S095-P (only for SPB-5 / SMBB-80)
Material: Polyamide (PA)

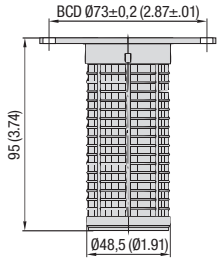

Six-hole bolt pattern with flange interface according to DIN 24557, part 2

Telescopic Plastic Basket
S200 (for SPB-4/5)
Material: Polypropylene (PP)

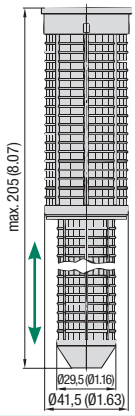

Pressurisation

Many tank filler breathers of the SPB, SMBB and SMBT series are also available as pressurised versions. Information on the specific valve and pressurization settings that are available by default can be found on the corresponding catalogue pages.

When the fluid level inside the reservoir rises, no air is expelled from the reservoir until the pressurisation level is reached. With decreasing fluid level inside the reservoir, the tank pressure drops and it is ensured that air is drawn into the reservoir.

Due to less breathing, the service life of a filler breather and the oil can be increased by using the pressurisation feature. It also minimizes foaming and cavitation, and provides additional protection from moisture entering the reservoir which causes erosion and oil degradation.

Further Accessories / Options

Weld Riser ▪ Type WR
Suitable for SPB-5
(See page 39 for details)

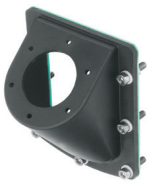

Side Mount Bracket (Polyamide) ▪ Type ASMB-1
Suitable for SPB-5
(See page 38 for details)

Side Mount Bracket (Aluminium) ▪ Type ASMB-2
Suitable for SPB-5
(See page 38 for details)

Dimensional drawings: All dimensions in mm (in).

Pressure Drop Flow Curves
Plastic Filler Breathers

Type SPB-1 (into / out of the tank)

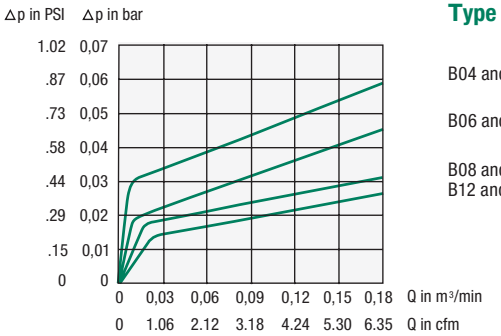

B04 and N04 (into / out of the tank)

B06 and N06 (into / out of the tank)

B08 and N08 (into / out of the tank)
B12 and N12 (into / out of the tank)

Type SPB-2 (into / out of the tank)

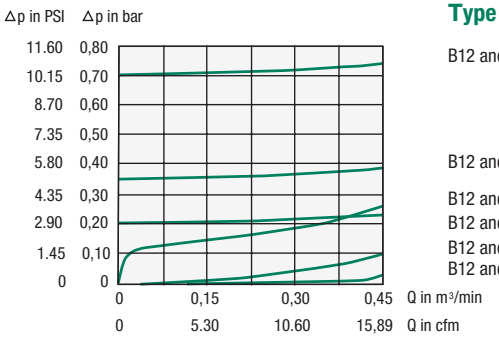

B12 and N12 (out of the tank; pressurised at 0,7 bar / 10 PSI)

B12 and N12 (out of the tank; pressurised at 0,35 bar / 5 PSI)

B12 and N12 (into the tank; pressurised at 0,7 bar / 10 PSI, 0,35 bar / 5 PSI or 0,2 bar / 3 PSI)
B12 and N12 (out of the tank; pressurised at 0,2 bar / 3 PSI)
B12 and N12 (out of the tank; without pressurisation)
B12 and N12 (into the tank; without pressurisation)

Type SPB-3 (into / out of the tank)

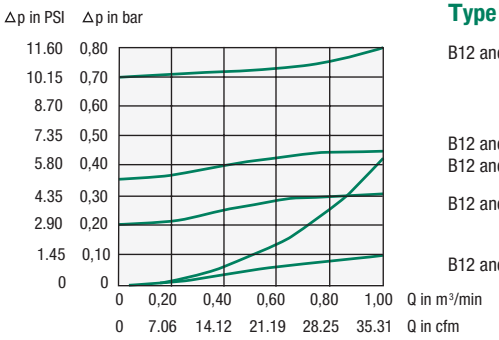

B12 and N12 (out of the tank; pressurised at 0,7 bar / 10 PSI)

B12 and N12 (out of the tank; pressurised at 0,35 bar / 5 PSI)
B12 and N12 (into the tank; pressurised at 0,7 bar / 10 PSI, 0,35 bar / 5 PSI or 0,2 bar / 3 PSI)

B12 and N12 (out of the tank; pressurised at 0,2 bar / 3 PSI)

B12 and N12 (into / out of the tank; without pressurisation)

Type SPB-4/5 (into the tank)

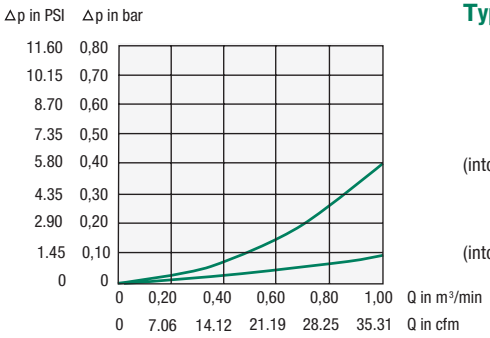

(into the tank; pressurised at 0,7 bar / 10 PSI, 0,35 bar / 5 PSI or 0,2 bar / 3 PSI)

(into the tank; without pressurisation)

Type SPB-4/5 (out of the tank)

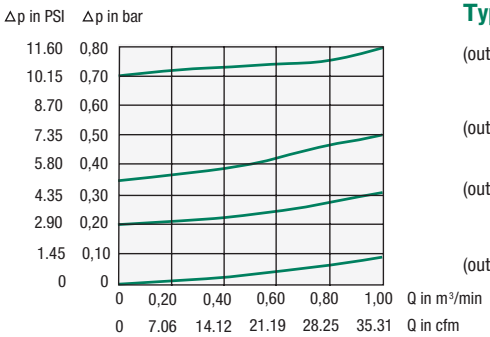

(out of the tank; pressurised at 0,7 bar / 10 PSI)

(out of the tank; pressurised at 0,35 bar / 5 PSI)

(out of the tank; pressurised at 0,2 bar / 3 PSI)

(out of the tank; without pressurisation)

B

Plastic Filler Breather
Type SPBN
(Compact Design; Threaded or Bayonet Version)

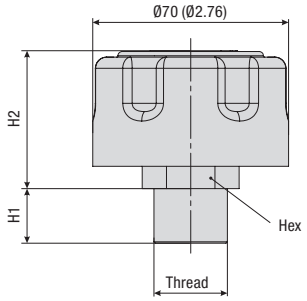

SPBN
Threaded Version

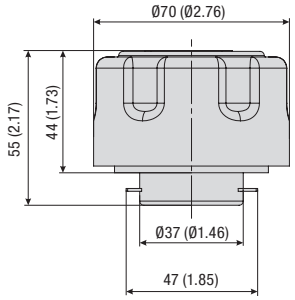

SPBN
Bayonet Version

Characteristics

Designed to be used as filler ports for hydraulic reservoirs, allowing the reservoir to breathe whilst protecting it from contamination found in harsh environments; ideal for applications in which space is limited

Features
- Cap diameter of Ø70 mm / Ø2.76 in
- Threaded version, equipped with male BSP thread (ISO 228) or male NPT thread (ANSI B1.20.1)
- Bayonet version for flange interfaces, with a six-hole bolt pattern, similar to DIN 24557, part 2
- Operating temperature range: -40 °C ... +120 °C / -40 °F ... +248 °F

Materials
- Body and cap made of glass-fibre reinforced Polyamide (PA)
- Socket made of Steel, zinc-plated
- Bayonet flange made of Steel, zinc-plated
- Basket made of Steel, zinc-plated or Polyamide (PA)
- Seals made of NBR (Buna-N®)

Contact STAUFF for alternative materials.

Accessories / Options
- Mounting set including bayonet flange, steel or plastic basket (800 µm), gaskets and bolts
- Pressurisation up to 0,7 bar / 10 PSI
- Air filter element
- Anti-splash feature (for Threaded version only)
- Plastic dipstick with integrated anti-splash feature
- Plastic dipstick with integrated magnet
- Oil Demister

Please see pages 29 and 53 for details.

Maximum Air Flow Rate
- 0,40 m^3/min / 14.13 cfm

Please see page 29 for detailed air flow curves.

Installation
- Six-hole bolt pattern for flange interfaces similar to DIN 24557, part 2 (bayonet version with mounting set):

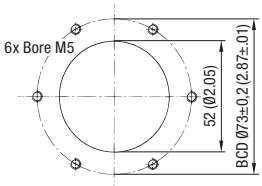

- 6 slotted pan head screws (ISO 1580 M5 x 12-5.8) are included in delivery of the bayonet version with mounting set

Dimensions (Threaded Version)

Thread	Dimensions (mm/in)		
	H1	H2	Hex
Male G3/4 BSP	19,5	49,5	30
(ISO 228)	.77	1.95	1.18

Thread	Dimensions (mm/in)		
	H1	H2	Hex
Male 3/4 NPT	19,5	49,5	30
(ANSI B1.20.1)	.77	1.95	1.18

Order Codes

SPBN - 2 - O - 10 - B12 - O - D200

① ② ③ ④ ⑤ ⑥ ⑦

① Type

Plastic Filler Breather (Compact Design)	**SPBN**

② Version

Cap diameter Ø70 mm (Ø2.76 in)	**2**

③ Pressurisation

Without pressurisation (standard option)	**0**
Pressurised at 0,2 bar / 3 PSI	**B0.2**
Pressurised at 0,35 bar / 5 PSI	**B0.35**
Pressurised at 0,7 bar / 10 PSI	**B0.7**

Please see page 29 for details.

④ Air Filter Element (Material / Micron Rating)

10 µm Foam / PUR (standard option)	**10**
40 µm Foam / PUR	**40**

Contact STAUFF for alternative materials / micron ratings.

⑤ Connection

Threaded version; Male G3/4 thread	**B12**
Threaded version; Male 3/4 NPT thread	**N12**
Bayonet version; Breather only	**BS**
Bayonet version; Breather including mounting set (with bayonet flange, gaskets and bolts)	**BM**
Bayonet version; Option BS and metal basket with flange interface (80 mm / 3.15 in)	**S080**
Bayonet version; Option BS and metal basket with flange interface (100 mm / 3.94 in)	**S100**
Bayonet version; Option BS and metal basket with flange interface (150 mm / 5.91 in)	**S150**
Bayonet version; Option BS and metal basket with flange interface (200 mm / 7.87 in)	**S200**
Bayonet version; Option BS and plastic basket with flange interface (95 mm / 3.74 in)	**S095P**

⑥ Anti-Splash Feature

With anti-splash feature	**A**
Without anti-splash feature (standard option)	**0**

Please see page 29 for details.

⑦ Dipstick

Plastic dipstick (200 mm / 7.88 in) with integrated anti-splash feature	**D200**
Plastic dipstick (300 mm / 11.81 in) with integrated anti-splash feature	**D300**
Plastic dipstick (300 mm / 11.81 in) with integrated magnet	**D300M**
Without dipstick	**-**

A shorter dipstick length can be achieved by simply cutting down the total length according to individual requirements. Please see page 26 for details.

Dimensional drawings: All dimensions in mm (in).

B

Plastic Dipstick Anti-Splash Feature

For all Plastic Filler Breathers SPBN, dipsticks made of Polyamide are available as an option. These dipsticks are available in 2 standard lengths of 200 mm / 7.87 in and 300 mm / 11.81 in and equipped with 2 adjustable level indicators in green and red colour. A shorter dipstick length can be achieved by simply cutting down the total length according to individual requirements.

All dipsticks have an integrated anti-splash feature protecting the SPBN from backspilling fluid and avoiding an early breakdown of the air filter element. For Plastic Filler Breathers without dipstick, the anti-splash function can be achieved by an integrated concave baffle.

Please note: When choosing a combination of a dipstick and a basket, the dipstick has to be at least 15 mm / .59 in shorter than the basket.

Special designs and alternative materials available on request.
Please contact STAUFF for further details.

Pressurisation

Many tank filler breathers of the SPB, SMBB and SMBT series are also available as pressurised versions. Information on the specific valve and pressurization settings that are available by default can be found on the corresponding catalogue pages.

When the fluid level inside the reservoir rises, no air is expelled from the reservoir until the pressurisation level is reached. With decreasing fluid level inside the reservoir, the tank pressure drops and it is ensured that air is drawn into the reservoir.

Due to less breathing, the service life of a filler breather and the oil can be increased by using the pressurisation feature. It also minimizes foaming and cavitation, and provides additional protection from moisture entering the reservoir which causes erosion and oil degradation.

Mounting Set for Baskets (including Bayonet Flange, Gaskets and Bolts)

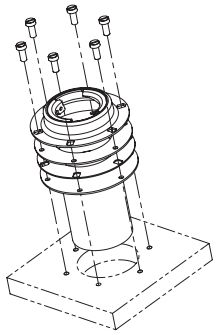

Scope of Delivery / Order Codes

Mounting sets for baskets include the following components:

- 6 slotted pan head screws made of steel, zinc-plated (ISO 1580 M5 x 12-5.8)
- Bayonet flange made of steel, zinc-plated, with six-hole bolt pattern acc. to DIN 24557, part 2
- 2 gaskets made of NBR (Buna-N®) - one for underneath and one for on top of the basket
- Metal or plastic basket (only if required):

Metal basket (80 mm / 3.15 in):	**S-080-M-F-SPBN-BS-B**
Metal basket (100 mm / 3.94 in):	**S-100-M-F-SPBN-BS-B**
Metal basket (150 mm / 5.91 in):	**S-150-M-F-SPBN-BS-B**
Metal basket (200 mm / 7.87 in):	**S-200-M-F-SPBN-BS-B**
Plastic basket (95 mm / 3.74 in):	**S-095-P-F-SPBN-BS-B**
Without basket:	**Adapter-SPBN-BM-B**

Mounting sets can also be ordered as part of a complete breather assembly.
Please see page 28 for details.

Further Accessories / Options

Extended Bayonet Flange ▪ Type EBF
Suitable for SPBN; Bayonet Version BM
(See page 39 for details)

Weld Riser ▪ Type WR
Suitable for SPBN; Bayonet Version BM
(See page 39 for details)

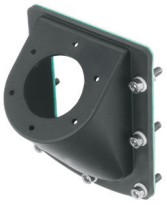

Side Mount Bracket (Polyamide) ▪ Type ASMB-1
Suitable for SPBN; Bayonet Version BM
(See page 38 for details)

Side Mount Bracket (Aluminium) ▪ Type ASMB-2
Suitable for SPBN; Bayonet Version BM
(See page 38 for details)

Pressure Drop Flow Curves Plastic Filler Breathers

Type SPBN (into the tank)

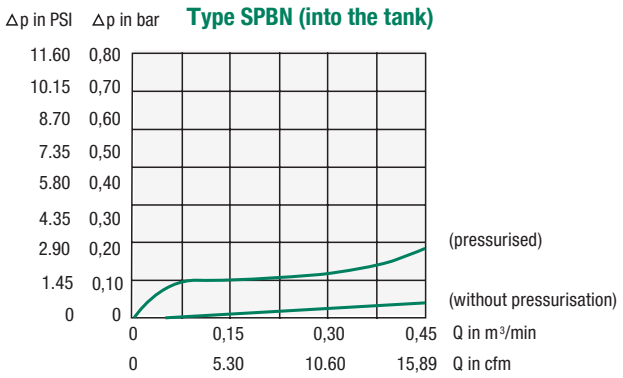

Type SPBN (out of the tank)

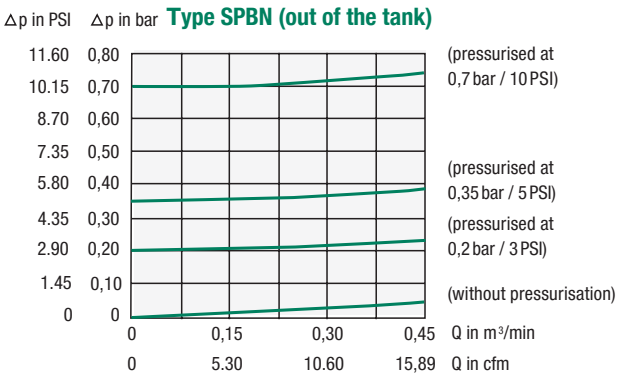

B

Plastic Filler Breather Mini
Type SPBM
(Threaded Version)

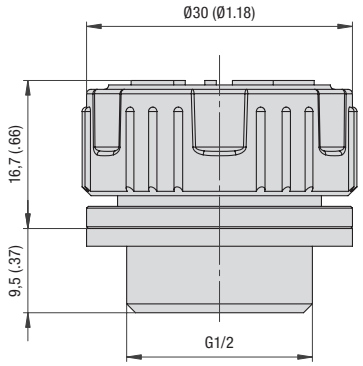

Characteristics

Designed to be used as filler ports for hydraulic reservoirs, allowing the reservoir to breathe whilst protecting it from contamination found in harsh environments

Features
- Available with different cap Logos
- Threaded version, equipped with male BSP thread (ISO 228)
- Operating temperature range: -40 °C ... +120 °C / -40 °F ... +248 °F

Materials
- Made of non-corrosive materials
- Body and cap made of glass-fibre reinforced Polyamide (PA)
- Seals made of NBR (Buna-N®)

Contact STAUFF for alternative materials.

Accessories / Options
- Air filter element
- Anti-splash feature
- Plastic dipstick with integrated anti-splash feature
- Plastic dipstick with integrated magnet

Please see page 26 for details.

Maximum Air Flow Rate
- 0,25 m³/min / 8.83 cfm

Please see below for detailed air flow curves.

Installation
- Recommended mounting spaces: Ø48 mm / Ø1.89 in

Order Codes

SPBM - 1 - S - 10 - B08 - A - D200

① ② ③ ④ ⑤ ⑥ ⑦

① Type

Plastic Filler Breather Mini	**SPBM**

② Version

Threaded version; Cap diameter Ø30 mm (Ø1.18 in)	**1**

③ Logo

STAUFF Logo (black cap)	**S**
OIL Logo (red cap)	**O**
Neutral design without any Logo	**N**

Contact STAUFF for special Logos / Colors

④ Air Filter Element (Material / Micron Rating)

Without air filter element	**0**
10 µm Foam / PUR (standard option)	**10**

Contact STAUFF for alternative materials / micron ratings.

⑤ Connection Thread (Male)

G1/2 BSP	**B08**

⑥ Anti-Splash Feature

With anti-splash feature (standard option)	**A**
Without anti-splash feature	**0**

⑦ Dipstick

Plastic dipstick (200 mm / 7.88 in) with integrated anti-splash feature	**D200**
Plastic dipstick (300 mm / 11.81 in) with integrated anti-splash feature	**D300**
Plastic dipstick (300 mm / 11.81 in) with integrated magnet	**D300M**
Without dipstick	**-**

A shorter dipstick length can be achieved by simply cutting down the total length according to individual requirements. Please see page 26 for details.

Pressure Drop Flow Curves

Type SPBM (into the tank)

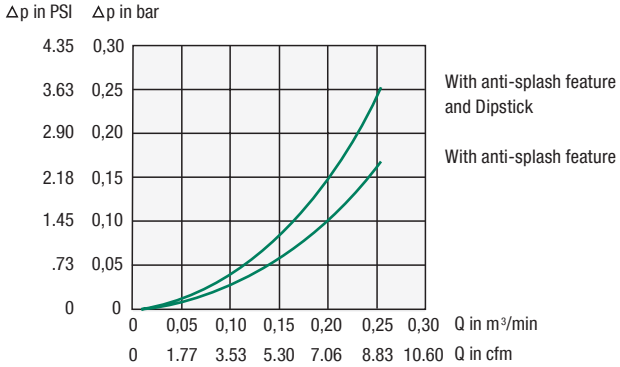

Type SPBM (out of the tank)

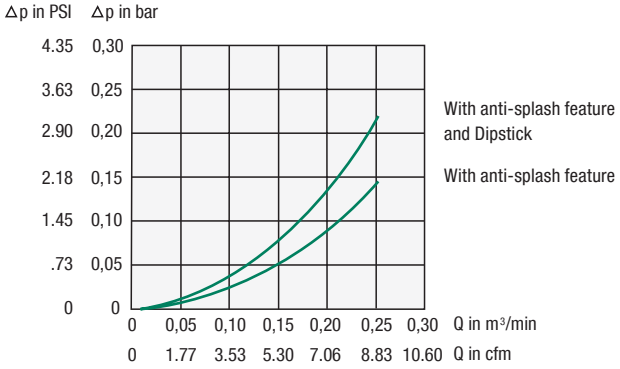

Dimensional drawings: All dimensions in mm (in).

Plastic Filler Breather
Type SES
(Threaded or Welded Versions)

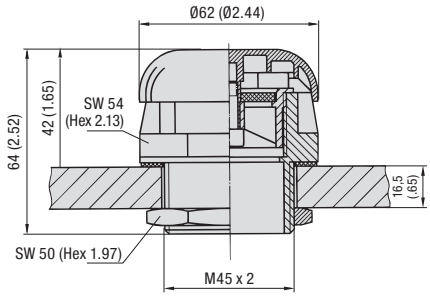

Threaded Version
SES-1

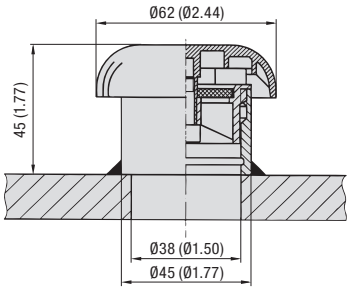

Welded Version
SES-2

Order Codes

SES - 1 - M300

① ② ③

① Type

Plastic Filler Breather	**SES**

② Version

Threaded version	**1**
Welded version	**2**

③ Basket / Dipstick Option

Plastic basket (81 mm / 3.19 in)	**S**
Metal dipstick (300 mm / 11.81 in)	**M300**
Metal dipstick (500 mm / 19.69 in)	**M500**
Without basket / dipstick	**0**

Accessories

Plastic Basket

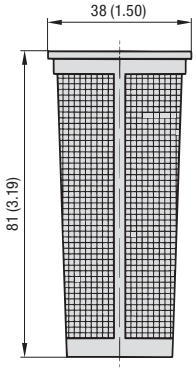

Metal Dipstick

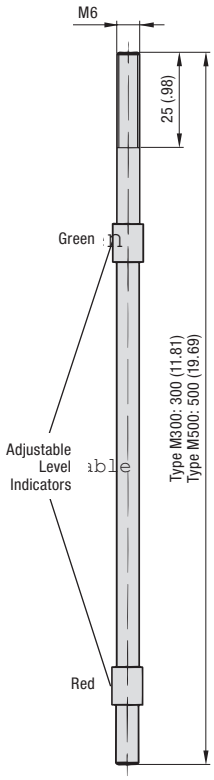

Characteristics

Designed to be used as filler ports for hydraulic reservoirs, allowing the reservoir to breathe whilst protecting it from contamination found in harsh environments

Features

- Cap diameter of Ø62 mm / Ø2.44 in
- Threaded version, equipped with male Metric ISO thread M45 x 2 and lock nut, or welded version with welding socket made of Steel (1.0718), untreated
- Supplied with 45 µm air filter element
- Operating temperature range: -40 °C ... +120 °C / -40 °F ... +248 °F

Materials

- Breather cap made of Polyamide (PA)
- Breather body / stud made of Polyamide (PA)
- Nut (Type SES-1) made of Steel (1.0718); Polyamide (PA) available on request
- Welding socket (Type SES-2) made of Steel (1.0718), untreated; Stainless Steel (V2A) available on request
- Air filter element made of Sintered Bronze
- Basket made of Polyamide (PA)
- Dipstick made of Steel (1.0718)
- Seals made of NBR (Buna-N®)

Contact STAUFF for alternative materials.

Accessories / Options

- Plastic basket (300 µm)
- Metal dipstick

Maximum Air Flow Rate

- 0,30 m^3/min / 10.60 cfm

Contact STAUFF for detailed air flow curves.

Installation

- Recommended diameter in the reservoir cap
  SES-1: Ø46 ±1 mm / Ø1.81 in ±.04 mm
  SES-2: Ø38 ±1 mm / Ø1.50 in ±.04 mm

Dimensional drawings: All dimensions in mm (in).

B

Metal Filler Breather
Type SMBT-47
(Threaded Version)

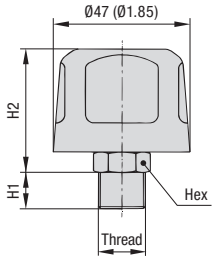

Characteristics

Designed to be used as filler ports for hydraulic reservoirs, allowing the reservoir to breathe whilst protecting it from contamination found in harsh environments

Features
- Cap diameter of Ø47 mm / Ø1.85 in
- Threaded version, equipped with male BSP thread (ISO 228) or male NPT thread (ANSI B1.20.1)
- Operating temperature range: -30 °C ... +120 °C / -22 °F ... +248 °F

Materials
- Breather cap made of Steel, zinc/nickel-plated (Fe/Zn Ni 6) and free of hexavalent chromium CrVI (standard option); chrome-plated and epoxy-coated versions available
- Threaded socket made of Steel, zinc-plated

Contact STAUFF for alternative materials.

Accessories / Options
- Air filter element

Maximum Air Flow Rate
- 0,40 m^3/min / 14.13 cfm

Contact STAUFF for detailed air flow curves.

Dimensions

Thread	Dimensions (mm/in)		
	H1	H2	Hex
Male G1/4 BSP	10	41	17
(ISO 228)	.39	2.38	.67
Male G3/8 BSP	13	41	19
(ISO 228)	.51	2.38	.74
Male G1/2 BSP	14	41	22
(ISO 228)	.55	2.38	.88

Thread	Dimensions (mm/in)		
	H1	H2	Hex
Male 1/4 NPT	13	41	17
(ANSI B1.20.1)	.51	2.38	.67
Male 3/8 NPT	15	41	19
(ANSI B1.20.1)	.59	2.38	.74

Contact STAUFF for alternative threads.

Order Codes

SMBT - 47 - S - 10 - O - B08

① ② ③ ④ ⑤ ⑥

① Type / Version

Metal Filler Breather; Threaded version	**SMBT**

② Cap Diameter / Material / Surface Finishing

Cap diameter Ø47 mm (Ø1.85 in); Breather cap made of Steel, zinc/nickel-plated (standard option)	**47**
Cap diameter Ø47 mm (Ø1.85 in); Breather cap made of Steel, chrome-plated	**47C**
Cap diameter Ø47 mm (Ø1.85 in); Breather cap made of Steel, expoxy-coated	**47E**

③ Label

With STAUFF logo (standard option)	**S**
Neutral design without any logo	**N**

④ Air Filter Element (Material / Micron Rating)

Without Breather Function	**0**
3 µm Filter Paper	**03**
10 µm Foam / PUR (standard option)	**10**
40 µm Foam / PUR	**40**

Contact STAUFF for alternative materials / micron ratings.

⑤ Pressurisation

Without pressurisation (standard option)	**0**

No pressurisation available for this cap diameter.

⑥ Connection Thread (Male)

G1/4	**B04**
G3/8	**B06**
G1/2	**B08**
1/4 NPT	**N04**
3/8 NPT	**N06**

Contact STAUFF for alternative threads.

Dimensional drawings: All dimensions in mm (in).

Metal Filler Breather Type SMBB-47 (Bayonet Version)

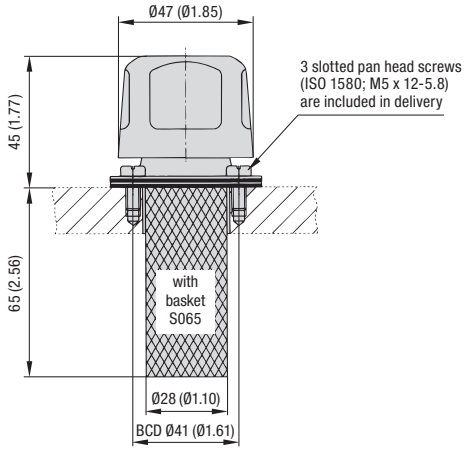

Characteristics

Designed to be used as filler ports for hydraulic reservoirs, allowing the reservoir to breathe whilst protecting it from contamination found in harsh environments

Features
- Cap diameter of Ø47 mm / Ø1.85 in
- Bayonet version with a three-hole bolt pattern
- Operating temperature range:
  -30 °C ... +120 °C / -22 °F ... +248 °F

Materials
- Breather cap made of Steel, zinc/nickel-plated (Fe/Zn Ni 6) and free of hexavalent chromium CrVI (standard option); chrome-plated and epoxy-coated versions available
- Bayonet flange made of Steel, zinc-plated
- Basket made of Steel, zinc-plated
- Seals made of Cork

Contact STAUFF for alternative materials.

Accessories / Options
- Metal basket (800 µm)
- Air filter element

Maximum Air Flow Rate
- 0,40 m³/min / 14.13 cfm

Contact STAUFF for detailed air flow curves.

Installation
- Three-hole bolt pattern for flange interfaces:

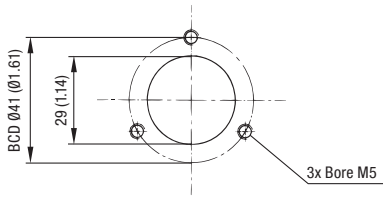

- 3 slotted pan head screws (ISO 1580 M5 x 12-5.8) are included in delivery; can be replaced by regular M5 bolts, if required

Order Codes

SMBB - 47 - S - 10 - O - C - S065

① ② ③ ④ ⑤ ⑥ ⑦

① Type / Version

Metal Filler Breather; Bayonet version	**SMBB**

② Cap Diameter / Material / Surface Finishing

Cap diameter Ø47 mm (Ø1.85 in); Breather cap made of Steel, zinc/nickel-plated (standard option)	**47**
Cap diameter Ø47 mm (Ø1.85 in); Breather cap made of Steel, chrome-plated	**47C**
Cap diameter Ø47 mm (Ø1.85 in); Breather cap made of Steel, expoxy-coated	**47E**

③ Label

With STAUFF logo (standard option)	**S**
Neutral design without any logo	**N**

④ Air Filter Element (Material / Micron Rating)

Without Breather Function	**0**
3 µm Filter Paper	**03**
10 µm Foam / PUR (standard option)	**10**
40 µm Foam / PUR	**40**

Contact STAUFF for alternative materials / micron ratings.

⑤ Pressurisation

Without pressurisation (standard option)	**0**

No pressurisation available for this cap diameter.

⑥ Sealing Material

Cork (standard option)	**C**

⑦ Basket Option

Metal basket (65 mm / 2.56 in) (standard option)	**S065**
Without basket	**0**

Dimensional drawings: All dimensions in mm (in).

B

Metal Filler Breather Type SMBT-80 (Threaded Version)

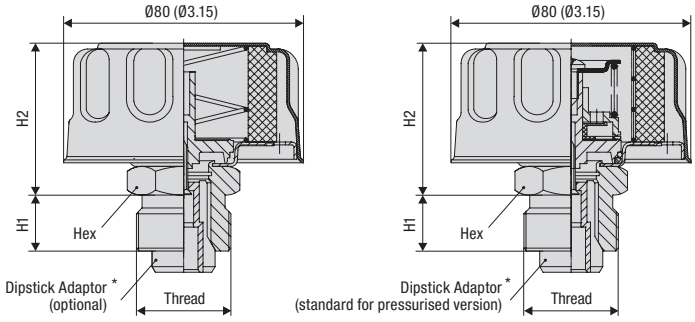

Without Pressurisation **Pressurised**

* Please note: The disptick adaptor is not available for connection threads G1/2 and 1/2 NPT.

Characteristics

Designed to be used as filler ports for hydraulic reservoirs, allowing the reservoir to breathe whilst protecting it from contamination found in harsh environments

Features

- Cap diameter of Ø80 mm / Ø3.15 in
- Threaded version, equipped with male BSP thread (ISO 228) or male NPT thread (ANSI B1.20.1)
- Operating temperature range: -30 °C ... +120 °C / -22 °F ... +248 °F

Materials

- Breather cap made of Steel, zinc/nickel-plated (Fe/Zn Ni 6) and free of hexavalent chromium CrVI (standard option); chrome-plated and epoxy-coated versions available
- Threaded socket made of Steel, zinc-plated
- Dipstick adaptor made of Polyamide (PA)

Contact STAUFF for alternative materials.

Accessories / Options

- Pressurisation up to 0,7 bar / 10 PSI
- Air filter element
- Dipstick adaptor suitable for plastic dipstick DS-1 (not for connection threads G1/2 and 1/2 NPT)
- Plastic dipstick DS-1 with integrated anti-splash feature (not for connection threads G1/2 and 1/2 NPT)
- Plastic dipstick with integrated magnet
- Oil Demister

Please see pages 26 and 53 for details.

Maximum Air Flow Rate

- 0,45 m^3/min / 15.89 cfm

Contact STAUFF for detailed air flow curves.

Dimensions

Thread	Dimensions (mm/in)		
	H1	H2	Hex
Male G1/2 BSP	14	54	24
(ISO 228)	.55	2.13	.94
Male G3/4 BSP	16	54	30
(ISO 228)	.63	2.13	1.18
Male G1 BSP	19	54	36
(ISO 228)	.75	2.13	1.42

Thread	Dimensions (mm/in)		
	H1	H2	Hex
Male 1/2 NPT	14	52,5	24
(ANSI B1.20.1)	.51	2.07	.94
Male 3/4 NPT	16	52,5	30
(ANSI B1.20.1)	.59	2.07	1.18
Male G1 NPT	19	52,5	36
(ANSI B1.20.1)	.75	2.07	1.42

Order Codes

SMBT - 80 - S - 10 - O - B08 - O

① ② ③ ④ ⑤ ⑥ ⑦

① Type / Version

Metal Filler Breather; Threaded version	**SMBT**

② Cap Diameter / Material / Surface Finishing

Cap diameter Ø80 mm (Ø3.15 in); Breather cap made of Steel, zinc/nickel-plated (standard option)	**80**
Cap diameter Ø80 mm (Ø3.15 in); Breather cap made of Steel, chrome-plated	**80C**
Cap diameter Ø80 mm (Ø3.15 in); Breather cap made of Steel, epoxy-coated	**80E**

③ Label

With STAUFF logo (standard option)	**S**
Neutral design without any logo	**N**

④ Air Filter Element (Material / Micron Rating)

Without Breather Function	**0**
3 µm Filter Paper	**03**
10 µm Foam / PUR (standard option)	**10**
40 µm Foam / PUR	**40**

Contact STAUFF for alternative materials / micron ratings.

⑤ Pressurisation

Without pressurisation (standard option)	**0**
Pressurised at 0,35 bar / 5 PSI	**B0.35**
Pressurised at 0,7 bar / 10 PSI	**B0.7**

Please see page 26 for details.

⑥ Connection Thread (Male)

G1/2	**B08**
G3/4	**B12**
G1	**B16**
1/2 NPT	**N08**
3/4 NPT	**N12**
1 NPT	**N16**

Contact STAUFF for alternative threads.

⑦ Dipstick

Without dipstick (standard option)	**0**
With dipstick adaptor suitable for dipstick DS-1 (not for connection threads G1/2 and 1/2 NPT)	**A**
With dipstick adaptor and plastic dipstick DS-1 (300 mm / 11.81 in) with integrated anti-splash feature (not for connection threads G1/2 and 1/2 NPT)	**D300**
Plastic dipstick (300 mm / 11.81 in) with integrated magnet	**D300M**

A shorter dipstick length can be achieved by simply cutting down the total length according to individual requirements.

Please note: The dipstick adaptor is required for the subsequent installation of plastic dipsticks DS-1 (see page 26 for details), and is included in delivery when ordering a pressurised version. The dipstick adaptor is not available for connection threads G1/2 and 1/2 NPT.

Dimensional drawings: All dimensions in mm (in).

Metal Filler Breather Type SMBB-80 (Bayonet Version)

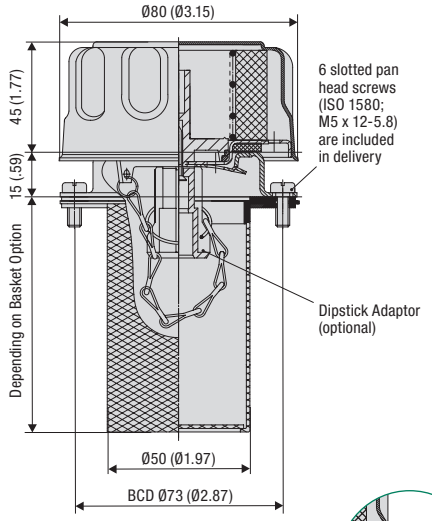

Without Pressurisation

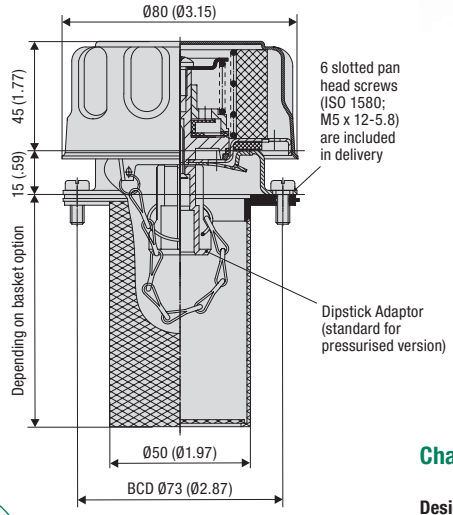

Pressurised

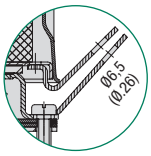

Locking Feature

(Recommended mounting space: Ø126 mm / Ø4.96 in)

Characteristics

Designed to be used as filler ports for hydraulic reservoirs, allowing the reservoir to breathe whilst protecting it from contamination found in harsh environments

Features

- Cap diameter of Ø80 mm / Ø3.15 in
- Bayonet version with a six-hole bolt pattern for flange interfaces similar to DIN 24557, part 2
- Operating temperature range: -30 °C ... +120 °C / -22 °F ... +248 °F

Materials

- Breather cap made of Steel, zinc/nickel-plated (Fe/Zn Ni 6) and free of hexavalent chromium CrVI (standard option); chrome-plated and epoxy-coated versions available
- Bayonet flange made of Steel, zinc-plated
- Basket made of Steel, zinc-plated or Polyamide (PA)
- Dipstick adaptor made of Polyamide (PA)
- Seals made of Cork (for filler breathers without pressurisation) or NBR (Buna-N®) (for pressurised filler breathers)

Contact STAUFF for alternative materials.

Accessories / Options

- Metal or plastic basket (800 µm)
- Pressurisation up to 0,7 bar / 10 PSI
- Air filter element
- Locking feature
- Dipstick adaptor (suitable for plastic dipstick DS-1)
- Plastic dipstick with integrated anti-splash feature
- Plastic dipstick with integrated magnet

Please see page 26 for details.

Maximum Air Flow Rate

- 0,45 m^3/min / 15.89 cfm

Contact STAUFF for detailed air flow curves.

Installation

- Six-hole bolt pattern for flange interfaces similar to DIN 24557, part 2:

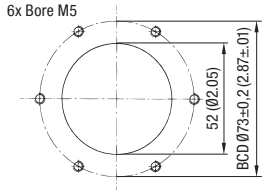

- 6 slotted pan head screws (ISO 1580 M5 x 12-5.8) are included in delivery; can be replaced by regular M5 bolts, if required

Order Codes

SMBB	-	80	-	S	-	L	-	10	-	O	-	C	-	S080	-	O
①		②		③		④		⑤		⑥		⑦		⑧		⑨

① Type / Version

Metal Filler Breather; Bayonet version	**SMBB**

② Cap Diameter / Material / Surface Finishing

Cap diameter Ø80 mm (Ø3.15 in); Breather cap made of Steel, zinc/nickel-plated (standard option)	**80**
Cap diameter Ø80 mm (Ø3.15 in); Breather cap made of Steel, chrome-plated	**80C**
Cap diameter Ø80 mm (Ø3.15 in); Breather cap made of Steel, expoxy-coated	**80E**

③ Label

With STAUFF logo (standard option)	**S**
Neutral design without any logo	**N**

④ Locking Feature

Without locking feature (standard option)	**O**
With locking feature (see drawing above)	**L**

⑤ Air Filter Element (Material / Micron Rating)

Without Breather Function	**O**
3 µm Filter Paper	**03**
10 µm Foam / PUR (standard option)	**10**
40 µm Foam / PUR	**40**

Contact STAUFF for alternative materials / micron ratings.

⑥ Pressurisation

Without pressurisation (standard option)	**O**
Pressurised at 0,35 bar / 5 PSI	**B0.35**
Pressurised at 0,7 bar / 10 PSI	**B0.7**

Please see page 26 for details.

⑦ Sealing Material

Cork (for filler breathers without pressurisation)	**C**
NBR (Buna-N®) (for pressurised filler breathers)	**B**

⑧ Basket Option

Without basket	**O**
Metal basket (80 mm / 3.15 in) (standard option)	**S080**
Plastic basket (95 mm / 3.74 in)	**S095P**
Metal basket (100 mm / 3.94 in)	**S100**
Metal basket (150 mm / 5.91 in)	**S150**
Metal basket (200 mm / 7.87 in)	**S200**

⑨ Dipstick

Without dipstick (standard option)	**O**
Dipstick adaptor (suitable for dipstick DS-1)	**A**
With dipstick adaptor and plastic dipstick DS-1 (300 mm / 11.81 in) with integrated anti-splash feature	**D300**
Plastic dipstick (300 mm / 11.81 in) with integrated magnet	**D300M**

A shorter dipstick length can be achieved by simply cutting down the total length according to individual requirements.

Please note: The dipstick adaptor is required for the subsequent installation of plastic dipsticks DS-1 (see page 26 for details), and is content of delivery when ordering a pressurised version.

Dimensional drawings: All dimensions in mm (in).

B

Metal Breather
Type SMBP-80
(Push-On Version)

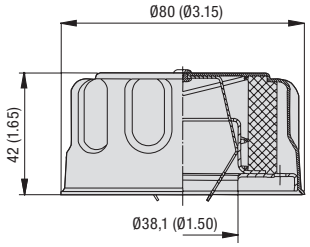

Characteristics

Designed to be used as filler ports for hydraulic reservoirs, allowing the reservoir to breathe whilst protecting it from contamination found in harsh environments

Features
- Cap diameter of Ø80 mm / Ø3.15 in
- Push-on version, suitable for pipe diameters up to 38 mm/ 1.50 in
- Operating temperature range: -30 °C ... +120 °C / -22 °F ... +248 °F

Materials
- Breather cap made of Steel, zinc/nickel-plated (Fe/Zn Ni 6) and free of hexavalent chromium CrVI (standard option); chrome-plated and epoxy-coated versions available

Contact STAUFF for alternative materials.

Accessories / Options
- Air filter element

Maximum Air Flow Rate
- 0,45 m^3/min / 15.89 cfm

Contact STAUFF for detailed air flow curves.

Order Codes

SMBP	-	80	-	S	-	10	-	O
①		②		③		④		⑤

① Type / Version

Metal Breather; Push-on version	**SMBP**

② Cap Diameter / Material / Surface Finishing

Cap diameter Ø80 mm (Ø3.15 in); Breather cap made of Steel, zinc/nickel-plated (standard option)	**80**
Cap diameter Ø80 (Ø3.15 in); Breather cap made of Steel, chrome-plated	**80C**
Cap diameter Ø80 (Ø3.15 in); Breather cap made of Steel, expoxy-coated	**80E**

③ Label

With STAUFF logo (standard option)	**S**
Neutral design without any logo	**N**

④ Air Filter Element (Material / Micron Rating)

Without Breather Function	**0**
10 µm Foam / PUR (standard option)	**10**
40 µm Foam / PUR	**40**

Contact STAUFF for alternative materials / micron ratings.

⑤ Dipstick

Without dipstick (standard option)	**0**

Dimensional drawings: All dimensions in mm (in).

Lockable Metal Filler Breather Type SMBL (Clamping, Threaded and Push-On Version)

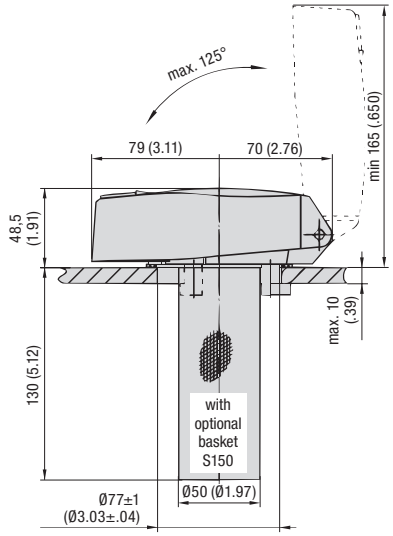

Clamping Version

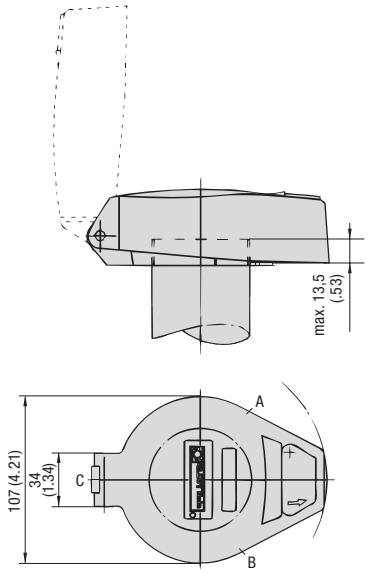

Threaded Version

Recommended mounting space: Ø162 mm / Ø6.38 in
2 locking screws M6 x 6 (DIN 916) at positions A and B

Push-On Version

3 locking screws M6 x 6 (DIN 916) at positions A, B and C

Clamping version
with metal basket
(150 mm / 5.91 in)

Characteristics

Designed to be used as lockable filler ports for hydraulic reservoirs, allowing the reservoir to breathe whilst protecting it from contamination found in harsh environments

Features

- Available as clamping version (with 3 clamping jaws), as threaded version (with female BSP thread) or push-on version, suitable for stand pipe mounting with pipe diameters up to 77,5 mm/ 3.05 in (secured by 3 locking screws)
- Key-lockable cap (2 keys included)
- Lock protected by rotating flap
- Operating temperature range: -30 °C ... +100 °C / -22 °F ... +212 °F
- Air flow in both directions, one direction only or no direction

Materials

- Breather cap made of Aluminium, lacquered (light-grey, RAL 9022)
- Breather body made of Aluminium and steel zinc-plated
- Basket made of Steel, zinc-plated or Polypropylene (PP)
- Seals made of NBR (Buna-N®) (standard option); FKM (Viton®) sealed version available

Contact STAUFF for alternative materials.

Accessories / Options

- Metal or plastic basket (800 µm; telescopic)
- Air filter element

Order Codes

SMBL - C - 10 - 1 - S150 - B - O

① ② ③ ④ ⑤ ⑥ ⑦

① Type

Lockable Metal Filler Breather	**SMBL**

② Version

Clamping version with 3 clamping jaws; Installation to a tank mounting hole of Ø77±1 mm / Ø3.03±.04 in	**C**
Threaded version with female G2 BSP thread	**G32**
Threaded version with female G2-1/2 BSP thread	**G40**
Push-on version for stand pipe mounting	**P**

③ Air Filter Element (Material / Micron Rating)

Without Breather Function	**0**
10 µm Foam / PUR (standard option)	**10**
40 µm Foam / PUR	**40**

Contact STAUFF for alternative materials / micron ratings.

④ Air Flow

Air flow in both directions (standard option)	**1**
No air flow	**2**
Air flow only into the tank	**3**

⑤ Basket Option

Without basket	**0**
Metal basket (150 mm / 5.91 in) (standard option)	**S150**
Plastic basket (80 mm / 3.15 in)	**S080**
Telescopic plastic basket (max. 205 mm / max. 8.07 in)	**S200**

The baskets of the SMBB-47/80 series cannot be used in conjunction with the SMBL series.

⑥ Sealing Material

NBR (Buna-N®) (standard option)	**B**
FKM (Viton®)	**V**

⑦ Cap Design

Breather cap made of Aluminium, lacquered (light-grey, RAL 9022)	**0**

Dimensional drawings: All dimensions in mm (in).

B

Side Mount Bracket Type ASMB-1 (Polyamide Version)

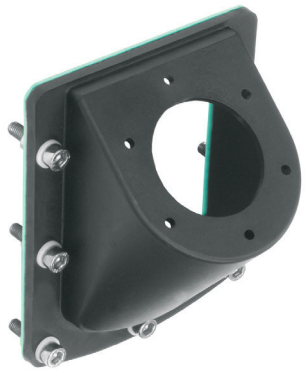

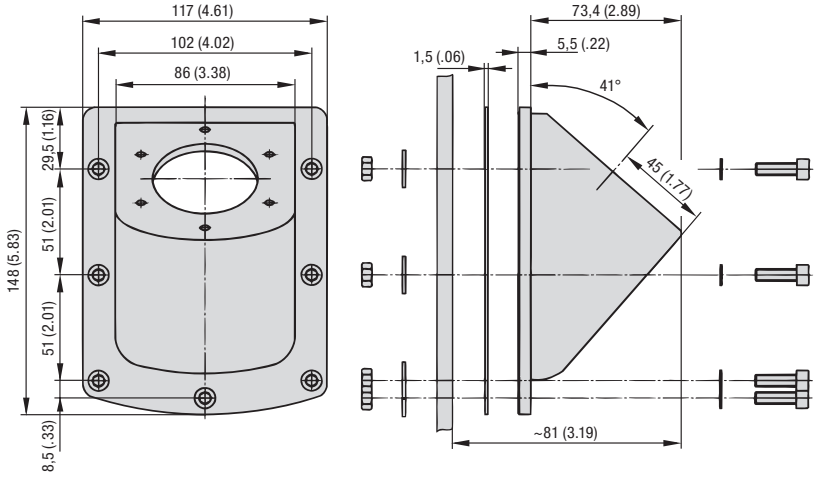

Characteristics

Lateral fastening of filler breathers with a six-hole flange connection similar to DIN 24557, part 2 to vertical or sloped walls of hydraulic reservoirs; ideal for applications in which space is limited

Suitability
- Suitable for Plastic Filler Breathers SPB-5 and SPBN (bayonet version) and Metal Filler Breathers SMBB-80

Materials
- Mounting bracket made of Polyamide (PA)
- Seal plate made of Klingerit
- Screws and hex nuts made of Steel, zinc-plated
- Washers made of Steel, zinc-plated
- Plastic spacers made of Polyamide (PA)

Scope of Delivery
- 1 mounting bracket
- 1 seal plate
- 7 socket cap screws M6 x 25 (ISO 4762)
- 7 plastic spacers 6,4 (DIN 125)
- 7 hex nuts M6 (ISO 4032)
- 7 washers 6,4 (DIN 9021)
- 6 sheet metal screws 4,8x13 (ISO 7049)

Installation
- Bolted to the side of the reservoir
- Bayonet flange of filler breather is placed on top
- Flange interface similar to DIN 24557, part 2 with 6 equally spaced mounting bores Ø4,5 mm / Ø.18 in (BCD Ø71±0,2 mm / Ø2.80±.01 in)

Order Codes

SMBB-ASMB - 1

① ②

① **Type**

Side Mount Bracket	**SMBB-ASMB**

② **Housing Material**

Polyamide (PA)	**1**

Side Mount Bracket Type ASMB-2 (Aluminium Version)

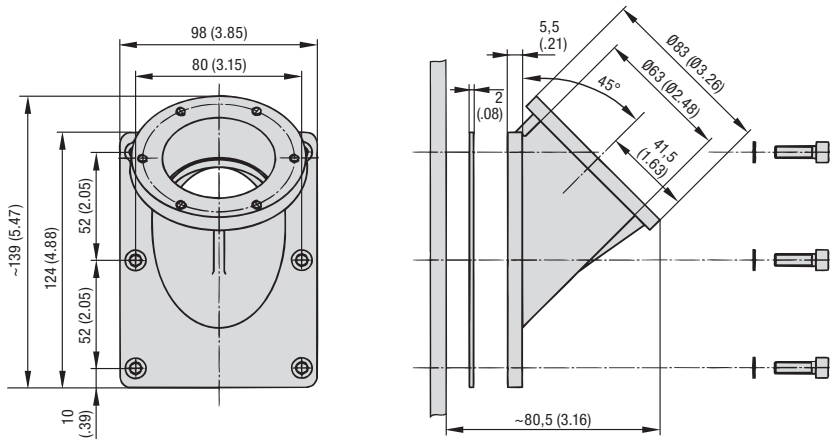

Characteristics

Lateral fastening of filler breathers with a six-hole flange connection similar to DIN 24557, part 2 to vertical or sloped walls of hydraulic reservoirs; ideal for applications in which space is limited

Suitability
- Suitable for Plastic Filler Breathers SPB-5 and SPBN (bayonet version) and Metal Filler Breathers SMBB-80

Materials
- Mounting bracket made of Aluminium
- Seal plate made of NBR (Buna-N®)
- Screws made of Steel, phosphated
- Washers made of gasket paper

Scope of Delivery
- 1 mounting bracket
- 1 seal plate
- 6 socket cap screws M6 x 20 (ISO 4762)
- 6 plastic spacers 6,4 (DIN 125)

Installation
- Bolted to the side of the reservoir
- Bayonet flange of filler breather is placed on top
- Flange interface similar to DIN 24557, part 2 with 6 equally spaced bores M5 (BCD Ø73±0,2 mm / Ø2.87±.01 in)

Order Codes

SMBB-ASMB - 2

① ②

① **Type**

Side Mount Bracket	**SMBB-ASMB**

② **Housing Material**

Aluminium	**2**

Dimensional drawings: All dimensions in mm (in).

B

Extended Bayonet Flange
Type EBF

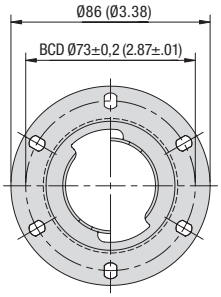

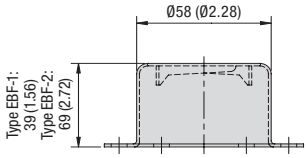

Order Codes

EBF - 2 - A

① ② ③

① Type

Extended Bayonet Flange	**EBF**

② Size

Total height of 39 mm (1.56 in)	**1**
Total height of 69 mm (2.72 in)	**2**

③ Anti-Splash Feature

Without anti-splash feature (standard option)	**-**
With anti-splash feature	**A**

Installation

- Six-hole bolt pattern for flange interfaces similar to DIN 24557, part 2:

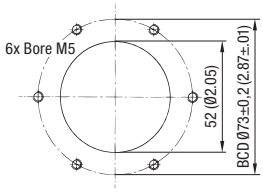

- Supplied without gaskets and bolts

Characteristics

Designed to raise filler breathers either 24 mm / .94 in or 54 mm / 2.12 in above the actual mounting surface of the reservoir to prevent contamination from blocking the filter element

Suitability

- Suitable for Metal Filler Breathers SMBB-80 and Plastic Filler Breathers SPBN (bayonet version)
- Replaces the existing bayonet flanges of these breathers

Materials

- Bayonet flange made of Steel, zinc-plated

Weld Riser
Type WR

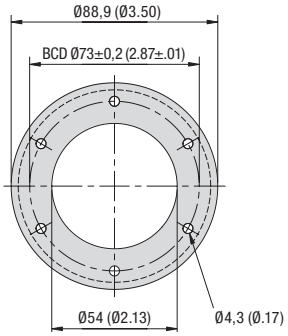

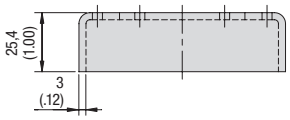

Order Codes

WR - 1

① ②

① Type

Weld Riser	**WR**

② Size

Total height of 25,4 mm (1.00 in)	**1**

Materials

- Weld riser made of Steel, untreated

Installation

- Welded to the top of the reservoir
- No requirement to drill and tap on the reservoir
- Bayonet flange of filler breather is placed on top

Characteristics

Designed to raise filler breathers 25,4 mm / 1.00 in above the actual mounting surface of the reservoir to prevent contamination from blocking the filter element whilst eliminating the requirement to drill and tap on the reservoir

Suitability

- Suitable for Metal Filler Breathers SMBB-80 as well as Plastic Filler Breathers SPB-5 and SPBN (bayonet version) and all components with a six-hole flange connection similar to DIN 24557, part 2

Dimensional drawings: All dimensions in mm (in).

Kommissionier-Shuttl
WALTER II
STAUFF

	Overview Particle and Desiccant Breathers	**43**
	Particle and Desiccant Breathers	**44 - 47**
	SDB (Robust Design)	**44 - 45**
	SDBL (Compact Design)	**46 - 47**
	Desiccant Breathers	**48 - 49**
	SVDB (Simplified Design)	**48 - 49**
	Accessories / Spare Parts	**50 - 54**
	Adaptors TBA	**50**
	Valve Units PSU	**51**
	Adaptor Plates AP	**52**
	Contamination Indicators FM / FME	**52**
	Oil Demisters TBA-...-OD	**53**
	Oil Demister Inserts PSU-OD	**53**
	Adaptor Ring for Stacking Assembly PSU-HC	**53**
	Refill and Maintenance Kits KIT-...-MAINTAIN	**53**
	Particle Breather (Air Breather Element) SGB	**44**

C

Particle and Desiccant Breathers ▪ Overview

Types		SDB	SDBL	SVDB	HC
Characteristics	Version	Robust Design	Compact Design	Simplified Design	High Capacity Design
	Function	Particle and Desiccant Breather	Particle and Desiccant Breather	Desiccant Breather	Particle and Desiccant Breather
	Micron rating of the Air Breather Element	3 µm	3 µm	100 µm	3 µm
	UV-Resistant[1]	● ● ● ●	● ● ● ●	● ● ● ●	● ● ● ●
	Service Life and Ease of Maintenance[1]	● ● ● ○	● ● ● ○	● ● ○ ○	● ● ● ●
Options	Standard Drying Agent	●	●	●	●
	Alternative Drying Agent	○	○	○	○
	Active Carbon (Odour and Oil Mist Seperation)	●	●	○	●
	Check Valves (Optimising Service Life)	●	●	○	●
Mounting Options	Standard Mounting Thread	BSP- Male	BSP- Female	BSP- Female	BSP- Male
	Alternative Mounting Thread	NPT- Male	Only with Adaptor (TBA)	Only with Adaptor (TBA)	NPT- Male
	Adaptor Plate (AP)	BSP	Only with Adaptor (TBA)	Only with Adaptor (TBA)	BSP
Spare Parts	Air Breather Element SGB	●	-	-	-
	Refill and Maintenance Kits	●	●	-	●
Adaptors	TBA	-	●	●	-
Valve Units	PSU-P-TF (Reservoir Pressurisation)	●	-	-	●
	PSU-P (Reservoir Pressurisation)	-	●	○	-
	PSU-QE (Bypass Valve)	-	●	○	-
Contamination Indicators	Visual Contamination Indicator FM	Only with Adaptor Plate (AP)	Only with Adaptor Plate (AP) and Adaptor (TBA)	-	Only with Adaptor Plate (AP)
	Visual-Electrical Contamination Indicator FME				
Accessories	TBA-...-OD (Oil Demister)	●	-	-	-
	PSU-OD (Oil Demister Insert)	-	Recommended with Adaptor (TBA)	Recommended with Adaptor (TBA)	●
	PSU-HC (Adaptor Ring for Stacking Assembly)	●	-	-	●
Applications[2] (Indoor and outdoor use)	Mobile Applications	● ● ● ●	● ● ○ ○	● ○ ○ ○	● ○ ○ ○
	Industrial Applications	● ● ● ●	● ● ● ●	● ● ● ○	● ● ● ●
	Marine Applications	● ● ● ●	● ● ○ ○	● ○ ○ ○	● ● ● ●
	Hydraulic Steel Construction	● ● ● ●	● ● ● ○	● ○ ○ ○	● ● ● ●
	Fluid and Lubricant Storage	● ● ● ○	● ● ● ○	● ● ● ○	● ● ● ●
	Gearboxes	● ● ● ●	● ● ● ○	● ○ ○ ○	● ● ● ●
	Further areas of Application	○	○	○	○

● available | ○ on request | - not available | ● ● ● ○ 3/4 (Rating[1], Recommendation[2])

Please note: The information on the selection and sizing of desiccant breathers in this catalogue is intended only as general non-binding guidelines. In addition to the maximum air flow rate and the frequency of breathing, the Type and volume of the reservoir, the medium used and its chemical compatibility as well as specific environmental conditions (e.g. contamination, ambient temperature and especially temperature changes, humidity) can also play a decisive role. Typically, large volume systems and applications with particularly challenging environmental conditions require the most careful analysis. Please contact STAUFF for assistance in the selection and sizing of desiccant Breathers.

C

Particle and Desiccant Breather (Robust Design) Type SDB

Characteristics

Function

When a reservoir or gearbox breathes, air containing moisture is ingested into the system. Temperature fluctuations will cause this moisture to condense which can speed up the oxidation of the fluid and lead to damage in the system.

Using SDB series Particle and Desiccant Breathers, the incoming air first passes through a coarse filter, then a drying agent and finally an Air Breather element to filter out any dirt particles in addition to the moisture.

Features

- Available in 4 different sizes
- Diameter of 98 mm or 130 mm
- Internal stainless steel tube for maximum stability
- Connection via BSP or NPT male thread on the stainless steel tube
- Available with optional, integrated check valves (Type SDB-CV)
- Replaceable Drying Agent
- Replaceable Air Breather Element (Type SGB) Micron rating of the Air Breather Element: 3 µm
- Refill and Maintenance Kits available
- Extensive range of accessories
- Operating temperature range: -40°C ... +90 °C / -40 °F ... +194 °F

Pressure Drop Flow Curves

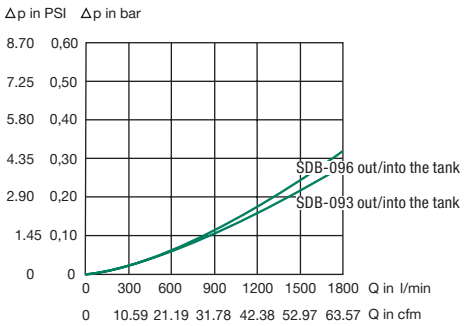

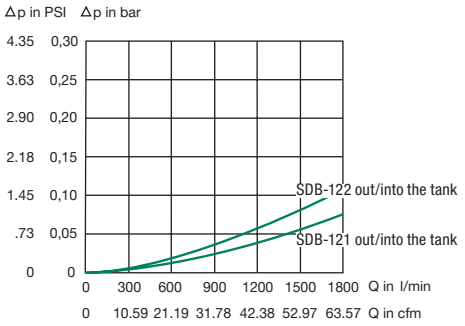

Description

The SDB series from STAUFF is robust design that is used in particularly demanding areas in mobile hydraulics (e.g. in the construction, mining and demolition industries).

Available in four different housing lengths between 160 mm and 355 mm (without thread) and has a diameter of 98 mm or 130 mm depending on the selected length.

The UV-resistant plastic housing is designed with an internal stainless steel tube for maximum stability. The Particle and Desiccant Breather can be installed on the system via the external thread at the lower end of the stainless steel tube.

The optional spring-loaded check valves integrated in the housing isolate the dryer material outside the from the atmosphere and optimise the service life.

A change in the color of the desiccant material indicates that it needs to be replaced (from red to orange in the standard version). Saturated Drying Agent, as well as the screw-on spin-on element, can be easily replaced by the user if necessary. Corresponding refill and maintenance kits are available from STAUFF.

Accessories / Spare Parts

Adaptor Plate
- for Size 093 and 096: **AP-1**
- for Size 121 and 122: **AP-2**

Contamination Indicators (Requires Adaptor Plate)
- Visual Contamination Indicator: **FM**
- Visual-Electrical Contamination Indicator: **FME**

Air Breather Element (with Seal)
- for Size 093 and 096: **SGB-090-03-B**
- for Size 121 and 122: **SGB-120-03-B**

Refill and Maintenance Kits
- for Size 093 and 096: **KIT-SDB-090-MAINTAIN**
- for Size 121 and 122: **KIT-SDB-120-MAINTAIN**

Please see page 53 for details.

Drying Agent Refill (supplied in air tight container)
- for Size 093: **RD-093**
- for Size 096: **RD-096**
- for Size 121: **RD-121**
- for Size 122: **RD-122**

Active Carbon Refill (supplied in air tight container)
- for Size 093, 096 and 121: **RC-093/096/121**
- for Size 122: **RC-122**

Please note: Use one layer of active carbon (1/3) and one layer of regular drying agent (2/3).

Oil Demister
- for Size 093 and 096, 121 and 122 **TBA-...-OD**

Adaptor Ring (Only for combination SDB+SDBL)
- for Size SDB-121/122 with SDBL-121/122 **PSU-HC**

Please see page 53 for details.

Particle and Desiccant Breather (Robust Design) Type SDB

Drying Agent

Changes Colour with increasing moisture

This product does not contain any dangerous substances according to EC Council directives 99/45/EC and 2001/60/EC.

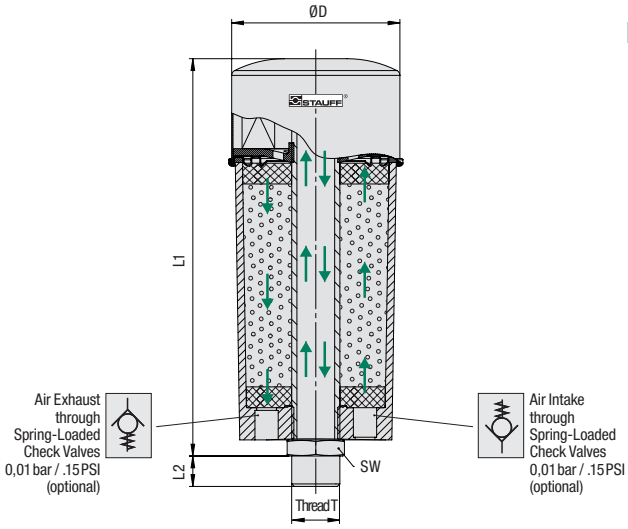

Dimensions and Technical Data

Type	Thread T	Dimensions (mm/in) ØD	L1	L2	Hex	Weight (g/lbs) Complete Unit	Max. Water Absorption (g/lbs)	Charge Weight of Drying Agent (g/lbs)	Air Breather Element Type	Filter Material	Micron Rating	Max. Air Flow Rate
SDB-093	G3/4 BSP Male (ISO 228)	98	160	18	32	1200	86	160	SGB-090-03-B	Inorganic Glass Fibre	3µm	0,70 m³/min
		3.86	6.30	.71	1.26	2.65	.19	.35				24.71 cfm
SDB-093N	1 NPT Male (ANSI B1.20.1)	98	160	24	38	1200	86	160	SGB-090-03-B	Inorganic Glass Fibre	3µm	0,70 m³/min
		3.86	6.30	.94	1.50	2.65	.19	.35				24.71 cfm
SDB-096	G3/4 BSP Male (ISO 228)	98	220	18	32	1500	172	370	SGB-090-03-B	Inorganic Glass Fibre	3µm	0,70 m³/min
		3.86	8.66	.71	1.26	3.31	.38	.82				24.71 cfm
SDB-096N	1 NPT Male (ANSI B1.20.1)	98	220	24	38	1500	172	370	SGB-090-03-B	Inorganic Glass Fibre	3µm	0,70 m³/min
		3.86	8.66	.94	1.50	3.31	.38	.82				24.71 cfm
SDB-121	G1-1/4 BSP Male (ISO 228)	130	258	25	50	2700	288	610	SGB-120-03-B	Inorganic Glass Fibre	3µm	1,50 m³/min
		5.12	10.16	.98	1.98	5.92	.63	1.34				52.97 cfm
SDB-121N	1-1/4 NPT Male (ANSI B1.20.1)	130	270	24	50	2700	288	610	SGB-120-03-B	Inorganic Glass Fibre	3µm	1,50 m³/min
		5.12	10.63	.94	1.98	5.92	.63	1.34				52.97 cfm
SDB-122	G1-1/4 BSP Male (ISO 228)	130	355	25	50	4000	576	1307	SGB-120-03-B	Inorganic Glass Fibre	3µm	1,50 m³/min
		5.12	13.98	.98	1.98	8.82	1.27	2.88				52.97 cfm
SDB-122N	1-1/4 NPT Male (ANSI B1.20.1)	130	367	24	50	4000	576	1307	SGB-120-03-B	Inorganic Glass Fibre	3µm	1,50 m³/min
		5.12	14.45	.94	1.98	8.82	1.27	2.88				52.97 cfm

Order Codes

SDB - 122 - CV - RCU - AP - FM / X

① ② ③ ④ ⑤ ⑥ ⑦

① Type

Particle and Desiccant Breather	**SDB**

② Size

093 BSP-Thread (Standard option)	**093**
093 NPT-Thread	**093N**
096 BSP-Thread (Standard option)	**096**
096 NPT-Thread	**096N**
121 BSP-Thread (Standard option)	**121**
121 NPT-Thread	**121N**
122 BSP-Thread (Standard option)	**122**
122 NPT-Thread	**122N**

③ Check Valves

without Check Valves (Standard option)	**-**
with Check Valves	**CV**

④ Drying Agent

Standard Drying Agent (Standard option) 25% Silica gel + 75% Molecular sieve	**-**
Active Carbon Drying Agent 1/3 Active Carbon + 2/3 Standard Drying Agent for binding oil mist (standard)	**RCU**
Active Carbon Drying Agent 1/3 Active Carbon + 2/3 Standard Drying Agent to prevent odours	**RCL**

Alternative Drying Agent on request.

⑤ Adaptor Plate

without Adaptor Plate (Standard option)	**-**
with Adaptor Plate	**AP**

Please see page 52 for details.

⑥ Contamination Indicators

without Contamination Indicator (Standard option)	**-**
with Visual Contamination Indicator (Requires Adaptor Plate)	**FM**
with Visual-Electrical Contamination Indicator (Requires Adaptor Plate)	**FME**

Please see page 52 for details.

⑦ Design Code

Only for information	**X**

C

Particle and Desiccant Breather (Compact Design) Type SDBL

Characteristics

Function

When a reservoir or gearbox breathes, air containing moisture is ingested into the system. Temperature fluctuations will cause this moisture to condense which can speed up the oxidation of the fluid and lead to damage in the system.

Using SDBL series Particle and Desiccant Breathers, the incoming air first passes through a coarse filter, then a dryer agent material and finally an Air Breather element to filter out any dirt particles in addition to the moisture.

Features

- Available in 5 different sizes
- Diameter of 70 mm, 99 mm or 129 mm
- One piece plastic housing
- BSP Female connection thread on plastic housing
- Available with optional, integrated check valves (Type SDBL-CV)
- Replaceable Drying Agent
- Replaceable Air Breather Element under the plastic cap, Micron rating of the Air Breather Element: 3 µm
- Refill and Maintenance Kits available
- Extensive range of accessories
- Operating temperature range: -40°C ... +90 °C / -40 °F ... +194 °F

Pressure Drop Flow Curves

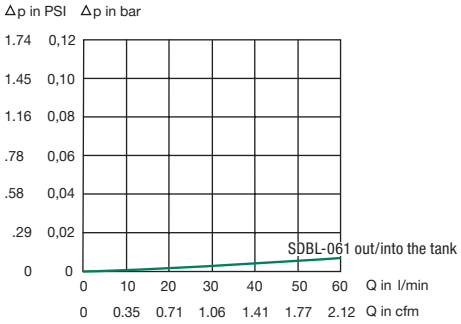

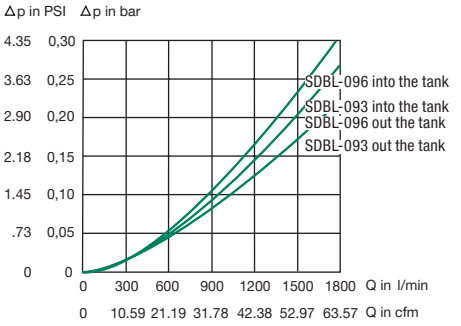

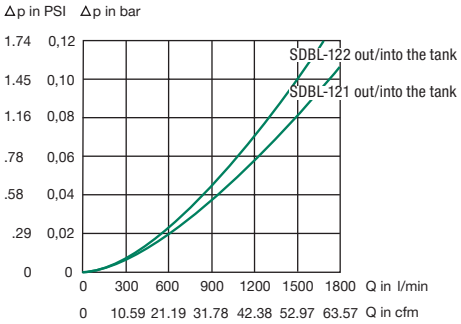

Description

The SDBL series from STAUFF is a compact and flexible design that are used, for example, in power pack and reservoir manufacturing.

Available in five different housing lengths between 117,5 mm and 322,5 mm and have a diameter of 70 mm, 99 mm or 129 mm depending on the selected length.

The UV-resistant one piece plastic housing is designed with a female BSP thread on the bottom. The Particle and Desiccant Breather can be installed with a adaptor.

The optional spring-loaded check valves integrated in the housing isolate the dryer material outside the from the atmosphere and optimising the service life.

A change in the color of the desiccant material indicates that it needs to be replaced (from red to orange in the standard version). Saturated dryer agent material, as well as the Air Breather element, which is placed under the plastic cap, can be easily replaced by the user if necessary. Corresponding refill and maintenance kits are available from STAUFF.

Accessories / Spare Parts

Adaptor Plate
- for Size 093 and 096: **AP-1**
- for Size 121 and 122: **AP-2**

Contamination Indicators (Requires Adaptor Plate)
- Visual Contamination Indicator: **FM**
- Visual-Electrical Contamination Indicator: **FME**

Refill and Maintenance Kits
- for Size 060: **KIT-SDBL-060-MAINTAIN**
- for Size 093 and 096: **KIT-SDBL-090-MAINTAIN**
- for Size 121 and 122: **KIT-SDBL-120-MAINTAIN**

Please see page 53 for details.

Drying Agent Refill (supplied in air tight container)
- for Size 061: **RD-061**
- for Size 093: **RD-093**
- for Size 096: **RD-096**
- for Size 121: **RD-121**
- for Size 122: **RD-122**

Active Carbon Refill (supplied in air tight container)
- for Size 093, 096 and 121: **RC-093/096/121**
- for Size 122: **RC-122**

Please note: Use one layer of active carbon (1/3) and one layer of regular drying agent (2/3).

Valve Unit with Reservoir Pressurisation (0.35 bar)
- for Size 121 and 122: **PSU-P**

Valve Unit with Bypass Valves
- for Size 121 and 122: **PSU-QE**

Oil Demister Insert
- for Size 093 and 096: **PSU-OD-090**
- for Size 121 and 122: **PSU-OD-120**

Adaptor Ring (Only for combination SDB+SDBL)
- for Size SDB-121/122 with SDBL-121/122 **PSU-HC**

Please see page 53 for details.

Particle and Desiccant Breather (Compact Design) Type SDBL

Drying Agent

Changes Colour with increasing moisture

This product does not contain any dangerous substances according to EC Council directives 99/45/EC and 2001/60/EC.

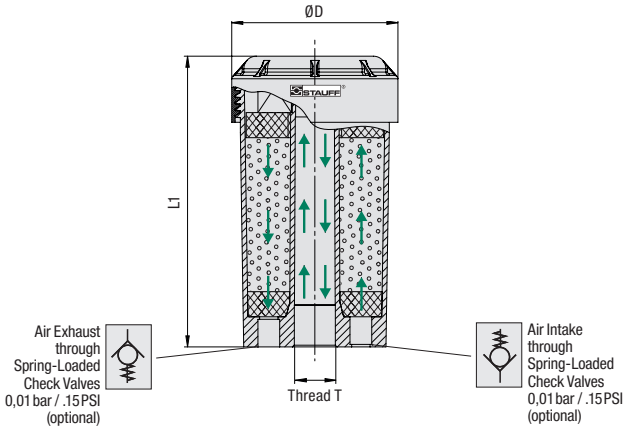

Dimensions and Technical Data

Type	Thread T	Dimensions (mm/in) ØD	L1	Weight (g/lbs) Complete Unit	Max. Water Absorption (g/lbs)	Charge Weight of Drying Agent (g/lbs)	Air Breather Element Type	Filter Material	Micron Rating	Max. Air Flow Rate
SDBL-061	G3/8 BSP Female (ISO 228)	70,5	117,5	250	29	55	LUF-SDBL-061-E03	Inorganic Glass Fibre	3µm	0,05 m³/min
		2.78	4.63	.55	.06	.12				1.77 cfm
SDBL-093	G3/4 BSP Female (ISO 228)	99	119,5	500	86	162	LUF-SDBL-093-E03	Inorganic Glass Fibre	3µm	0,70 m³/min
		3.90	4.70	1.10	.19	.36				24.71 cfm
SDBL-096	G3/4 BSP Female (ISO 228)	99	174,5	770	172	370	LUF-SDBL-096-E03	Inorganic Glass Fibre	3µm	0,70 m³/min
		3.90	5.81	1.70	.38	.82				24.71 cfm
SDBL-121	G 1-1/4 BSP Female (ISO 228)	129	204,5	1380	288	670	LUF-SDBL-121-E03	Inorganic Glass Fibre	3µm	1,50 m³/min
		5.08	8.05	3.04	.63	1.48				52.97 cfm
SDBL-122	G 1-1/4 BSP Female (ISO 228)	129	322,5	2300	576	1443	LUF-SDBL-122-E03	Inorganic Glass Fibre	3µm	1,50 m³/min
		5.08	12.70	5.07	1.27	3.18				52.97 cfm

Order Codes

SDBL	-	122	-	CV	-	RCU	-	AD	-	B16	-	QE	-	OD	-	AP	-	FM	/	X
①		②		③		④		⑤		⑥		⑦		⑧		⑨		⑩		⑪

① Type

Particle and Desiccant Breather	SDBL

② Size

061	061
093	093
096	096
121	121
122	122

③ Check Valves

without Check Valves (Standard option)	-
with Check Valves	CV

④ Drying Agent

Standard Drying Agent (Standard option) 25% Silica gel + 75% Molecular sieve	-
Active Carbon Drying Agent 1/3 Active Carbon + 2/3 Standard Drying Agent for binding oil mist (standard)	RCU
Active Carbon Drying Agent 1/3 Active Carbon + 2/3 Standard Drying Agent to prevent odours	RCL

Alternative Drying Agent on request.

⑤ Adaptors

without Adaptor (Standard option)	-
with Adaptor	AD

Please see page 50 for details.

⑥ Adaptor Thread

without Adaptor	-
1" BSP Male	B16
1" NPT Male	N16

⑦ Valve Unit (only for Size 120)

without Valve Unit (Standard option)	-
Reservoir Pressurisation (0.35 bar)	P
Check Valve	QE

Please see page 51 for details.

⑧ Oil Demister Insert

without Oil Demister Insert (Standard option)	-
with Oil Demister Insert (only Size 090/120)	OD

Please see page 53 for details.

⑨ Adaptor Plate

without Adaptor Plate (Standard option)	-
with Adaptor Plate	AP

Please see page 52 for details.

⑩ Contamination Indicators

without Contamination Indicator (Standard option)	-
with Visual Contamination Indicator (Requires Adaptor Plate)	FM
with Visual-Electrical Contamination Indicator (Requires Adaptor Plate)	FME

Please see page 52 for details.

⑪ Design Code

Only for information	X

C

Desiccant Breather (Simplified Design) Type SVDB

Characteristics

Function

When a reservoir or gearbox breathes, air containing moisture is ingested into the system. Temperature fluctuations will cause this moisture to condense which can speed up the oxidation of the fluid and lead to damage in the system.

Using SVDB series Desiccant Breathers, the incoming air first passes through a coarse filter, then a Drying Agent and finally an PU washer to filter out rough dirt particles.

Features

- Available in 5 different sizes
- Diameter of 63 mm, 91 mm or 121 mm
- Drying Agent und Air Breather Element is not replaceable
- One piece plastic housing
- BSP Female connection thread on plastic housing
- Filter Fineness of the PUR filter disc: 100 µm
- Operating temperature range: -40°C ... +90 °C / -40 °F ... +194 °F

Description

The SVDB series from STAUFF is a simplified design for less demanding applications. In contrast to the SDB and SDBL series, Desiccant Breathers of the SVDB series must be replaced when the service life of the Complete Unit is reached.

Available in five different housing lengths between 96,5 mm and 286,5 mm and have a diameter of 63 mm, 91 mm or 121 mm depending on the selected length.

The UV-resistant one piece plastic housing is designed with a female BSP thread on the bottom. The Particle and Desiccant Breather can be installed with a adaptor.

A change in the color of the desiccant material indicates that it needs to be replaced (from red to orange in the standard version). Saturated Drying Agent is not replaceable, so that the entire unit is disposed of when it reaches the end of its service life.

Pressure Drop Flow Curves

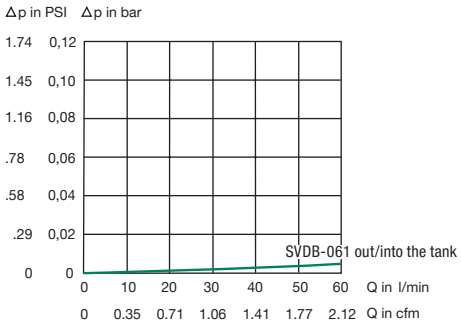

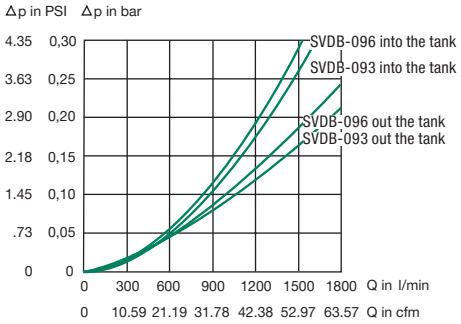

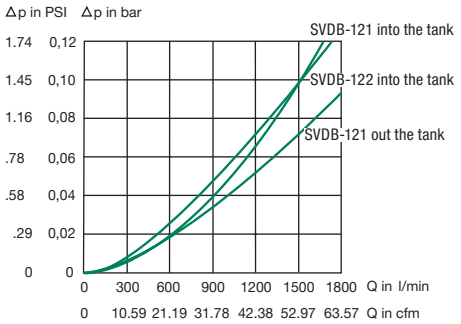

Accessories

Adaptor Plate
- for Size 093 and 096: **AP-1**
- for Size 121 and 122: **AP-2**

Please see page 52 for details.

Adaptors
- Several thread combinations available

Please see page 50 for details.

Valve Unit with Reservoir Pressurisation (0.35 bar)
- for Size 121 and 122: **PSU-P**

Please see page 51 for details.

Valve Unit with Check Valves
- for Size 121 and 122: **PSU-QE**

Please see page 51 for details.

Oil Demister Insert
- for Size 093 and 096: **PSU-OD-090**
- for Size 121 and 122: **PSU-OD-120**

Please see page 53 for details.

Desiccant Breather (Simplified Design) Type SVDB

Drying Agent

Changes Colour with increasing moisture

This product does not contain any dangerous substances according to EC Council directives 99/45/EC and 2001/60/EC.

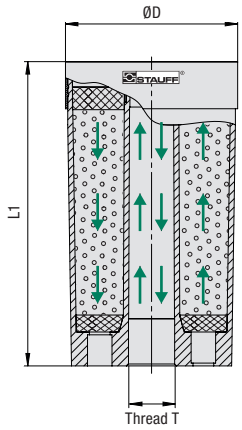

Dimensions and Technical Data

Type	Thread T	Dimensions (mm/in) ØD	L1	Weight (g/lbs) Complete Unit	Max. Water Absorption (g/lbs)	Charge Weight of Drying Agent (g/lbs)	PUR filter disc Filter Material	Max. Air Flow Rate
SVDB-061	G3/8 BSP Female (ISO 228)	63	96,5	182	29	78	PUR	0,05 m³/min
		2.48	3.80	.40	.06	.17		1.77 cfm
SVDB-093	G3/4 BSP Female (ISO 228)	91	106,5	375	86	207	PUR	0,70 m³/min
		3.58	4.19	.83	.19	.46		24.71 cfm
SVDB-096	G3/4 BSP Female (ISO 228)	91	161,5	630	172	391	PUR	0,70 m³/min
		3.58	6.36	1.39	.38	.86		24.71 cfm
SVDB-121	G 1-1/4 BSP Female (ISO 228)	121	168,5	1100	288	739	PUR	1,50 m³/min
		4.76	6.63	2.43	.63	1.63		52.97 cfm
SVDB-122	G 1-1/4 BSP Female (ISO 228)	121	286,5	2035	576	1543	PUR	1,50 m³/min
		4.76	11.28	4.49	1.27	3.40		52.97 cfm

Order Codes

SVDB - 122 / X

① ② ③

① Type

Desiccant Breather with Standard Drying Agent 25% Silica gel + 75% Molecular sieve	**SVDB**

② Size

061	**061**
093	**093**
096	**096**
121	**121**
122	**122**

③ Design Code

Only for information	**X**

Alternative types on request.

C

Adaptors
Type TBA

Delivery Standard SDBL

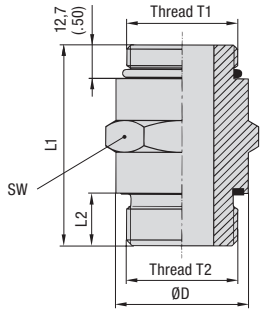

TBA-060-B06-B
TBA-090-B12-B
TBA-120-B20-B

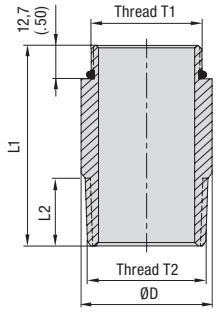

TBA-120-N20-B

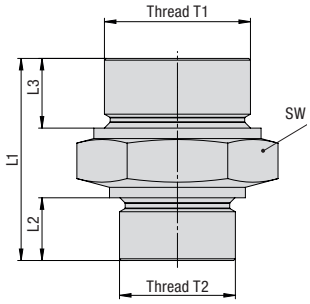

TBA-090-N16
TBA-090-B16
TBA-120-N16
TBA-120-B16
TBA-120-B20

Dimensional drawings: All dimensions in mm (in).

Characteristics

Allows direct installation of Desiccant Breathers and Spin-On Filter Elements with female thread on top of hydraulic reservoirs

Features
- Several thread combinations available
- TBA-120-N20-B-W32 without hexagon
- Seals included in delivery
  (Only for type "TBA-...-B")
- Also suits most common Spin-On filter elements

Materials
- Adaptor made of steel, zinc-plated
- Seals made of NBR (Buna-N®)

Contact STAUFF for alternative materials.

Order Codes and Dimensions

Thread T1	Thread T2	Dimensions (mm/in) L1	L2	L3	ØD	SW	for use with ...	Order Codes
G3/8 BSP Male (ISO 228)	G3/8 BSP Male (ISO 228)	43	11		21,9	22	SDBL-061 / SVDB-061	TBA-060-B06-B-W32
		1.69	.43		.86	.86		
G3/4 BSP Male (ISO 228)	G3/4 BSP Male (ISO 228)	57	16		32	32	SDBL-093 / SVDB-093 SDBL-096 / SVDB-096 Air Breather SGB-090	TBA-090-B12-B-W32
		2.24	.63		1.26	1.26		
G3/4 BSP Male (ISO 228)	G1 BSP Male (ISO 228)	49	20	19,2		41	SDBL-093 / SVDB-093 SDBL-096 / SVDB-096	TBA-090-B16-W32
		1.93	.79	.76		1.61		
G3/4 BSP Male (ISO 228)	1 NPT Male (ANSI B1.20.1)	53,5	23,5	17		38	SDBL-093 / SVDB-093 SDBL-096 / SVDB-096	TBA-090-N16-W32
		2.11	.93	.67		1.50		
G1-1/4 BSP Male (ISO 228)	1 NPT Male (ANSI B1.20.1)	60,5	23,5	20		50	SDBL-121 / SVDB-121 SDBL-122 / SVDB-122	TBA-120-N16-W32
		2.38	.93	.79		1.97		
G1-1/4 BSP Male (ISO 228)	G1 BSP Male (ISO 228)	58	18	20		50	SDBL-121 / SVDB-121 SDBL-122 / SVDB-122	TBA-120-B16-W32
		2.28	.71	.79		1.97		
G1-1/4 BSP Male (ISO 228)	G1-1/4 BSP Male (ISO 228)	76	20		50	50	SDBL-121 / SVDB-121 SDBL-122 / SVDB-122 Air Breather SGB-120	TBA-120-B20-B-W32
		3.00	.79		1.97	1.97		
G1-1/4 BSP Male (ISO 228)	G1-1/4 BSP Male (ISO 228)	60	20	20		50	SDBL-121 / SVDB-121 SDBL-122 / SVDB-122	TBA-120-B20-W32
		2.36	.79	.79		1.97		
G1-1/4 BSP Male (ISO 228)	1-1/4 NPT Male (ANSI B1.20.1)	76	22		42		SDBL-121 / SVDB-121 SDBL-122 / SVDB-122 Air Breather SGB-120	TBA-120-N20-B-W32
		3.00	.88		1.65			

Valve Unit Type PSU-P-TF

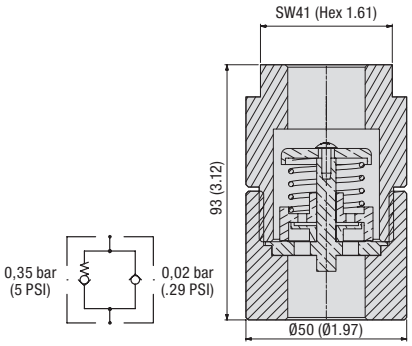

Dimensional drawings: All dimensions in mm (in).

Characteristics

Valve Units type PSU-P-TF increase the service life and reduce maintenance intervals of particle and desiccant breathers and tank filler breathers due to less air movement

Features

- Thread: G3/4 BSP Female (ISO 228)
- Reservoir Pressurisation with 0.35 bar / 5 PSI (no air is expelled from the reservoir until the pressurisation level is reached)
- Intended for Particle and Desiccant Breather series SDB, with adaptor also suitable with series SDBL and SVDB and also with breathers SPB and SMBT.

Materials

- Adaptor made of Aluminum
- Valves made of plastic
- Seals made of NBR (Buna-N®)
- Operating temperature range: -40 °C ... +120 °C / -40 °F ... +248 °F

Order Code

Order Code
TBA-090-B12F-B12F-B0.35

Valve Unit Type PSU-P

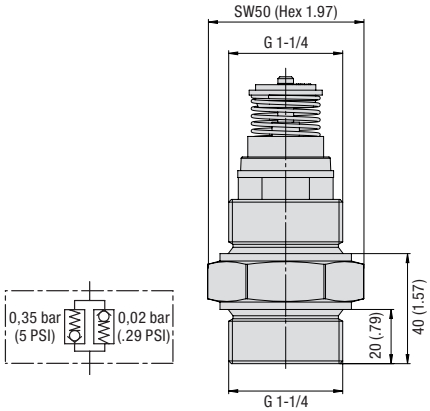

Dimensional drawings: All dimensions in mm (in).

Characteristics

Valve Units type PSU-P allows the maintaining of the Reservoir Pressurisation from 0.35 bar / 5 PSI.

Attached to the internal thread of the Desiccant Breather housing (only for type SDBL/SVDB-121 and SDBL/SVDB -122) and designed in such a way that the overall length of the Desiccant Breather is only slightly increased. Due to its installation in the housing, the valve unit cannot be combined with the oil demister insert of type PSU-OD.

Features

- Thread: G1-1/4 BSP Male (ISO 228)
- Reservoir Pressurisation with 0.35 bar / 5 PSI (no air is expelled from the reservoir until the pressurisation level is reached)
- Opening Pressure: 0.02 bar / .29 PSI (Air flow into the Tank)

Materials

- Adaptor made of steel, zinc-plated
- Valves made of plastic
- Seals made of NBR (Buna-N®)
- Operating temperature range: -40 °C ... +120 °C / -40 °F ... +248 °F

Order Code

Order Code
TBA-SDBL-120-B20-B0.35-P

Valve Unit Type PSU-QE

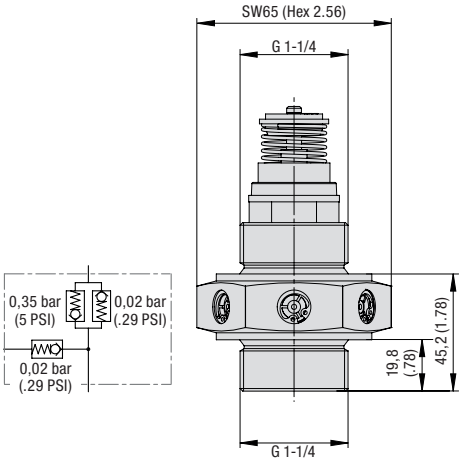

Dimensional drawings: All dimensions in mm (in).

Characteristics

Valve Units type PSU-QE are used to discharge outflowing air (with the 6 valves on the hexagon) past the Drying Agent to extend the service life.

Attached to the internal thread of the Desiccant Breather housing (only for type SDBL/SVDB-121 and SDBL/SVDB -122) and designed in such a way that the overall length of the Desiccant Breather is only slightly increased. Due to installation in the housing, the valve unit cannot be combined with the oil demister insert of type PSU-OD.

Features

- Thread: G1-1/4 BSP Male (ISO 228)
- Opening Pressure of the Check Valves: 0.02 bar / .29 PSI (Air flow into and out the Tank)
- Check Valve with 0.35 bar / 5 PSI

Materials

- Adaptor made of steel, zinc-plated
- Valves made of plastic
- Seals made of NBR (Buna-N®)
- Operating temperature range: -40 °C ... +120 °C / -40 °F ... +248 °F

Order Code

Order Code
TBA-SDBL-120-B20-B0.35-QE

C

Adaptor Plate Type AP

Particle and Desiccant Breather SDB with Adaptor Plate AP

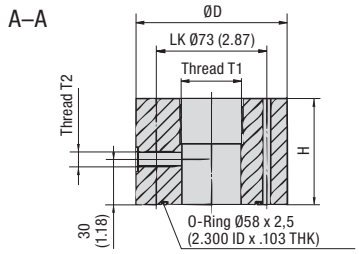

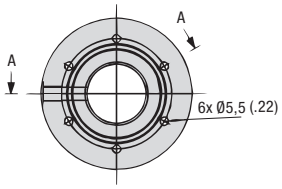

Dimensional drawings: All dimensions in mm (in).

Characteristics

Designed to simplify the installation of Desiccant Breathers and enable the use of a visual contamination indicator.

With Adaptor Plates AP, desiccant air breathers can be directly mounted to existing connections with a six-hole bolt pattern for flange interfaces similar to DIN 24557, part 2.

They are also equipped with a female G1/8 BSP thread (ISO 228) to connect with the Visual Contamination Indicator FM/FME.

Adaptor Plates AP are made of Polyamide (PA). A blind plug, O-ring made of NBR (Buna-N®) and 6 socket cap screws (ISO 4762) are supplied with AP as a standard.

Contact STAUFF for other Adaptor Plates.

Order Codes and Dimensions

Thread T1	Thread T2	Dimensions (mm/in) H	ØD	Socket Cap Screws included	for use with...	Order Code
G3/4 BSP Female (ISO 228)	G1/8 BSP Female (ISO 228)	50	88	M5 x 60 - 8.8 (Steel, zinc-plated)	SDB-093/096 SBDL-093/096 SVDB-093/096	AP-1-B12F
		1.98	3.46			
G1-1/4 BSP Female (ISO 228)	G1/8 BSP Female (ISO 228)	70	100	M5 x 80 - 8.8 (Steel, zinc-plated)	SDB-121/122 SBDL-121/122 SVDB-121/122	AP-2-B20F
		2.76	3.94			

Contamination Indicators Type FM/FME

Particle and Desiccant Breather SDB with Adaptor Plate AP and Visual Contamination Indicator FM or Visual-Electrical Contamination Indicator FME

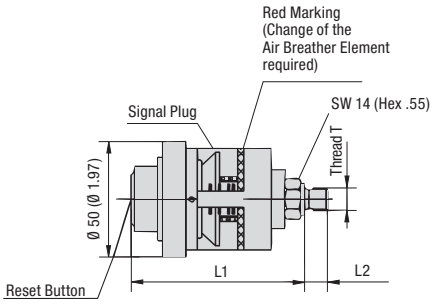

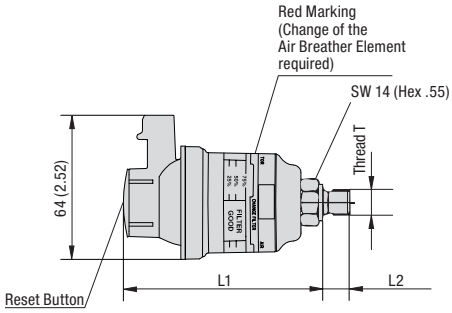

Dimensional drawings: All dimensions in mm (in).

Characteristics

Designed to indicate the status of Air Breather Elements.

Filter Minder Contamination Indicators are connected to the female G1/8 BSP thread (ISO 228) of the Adaptor Plate AP and give a indication of the contamination level of the Air Breather Element. A red marking indicates when the Air Breather Element has to be replaced.

Visual Contamination Indicators FM can be reset after each use.

Material

- Housing made of Polycarbonate

Technical Data

- Operating temperature range: -40 °C ... +121 °C (-40 °F ... +250 °F)
- Accuracy: ±10% (red marking)
- Standard Calibration: 2 to 8,7 kPA
- Full Scale (Vacuum): 5,0 kPa (20 IN.)
- Vacuum First Movement: 1,5 kPa (6 IN.)

Technical Data (FME)

- Electrical Connection (FME): Metri-Pack 150 plug
- Switching Function Type FME: n/o
- Switching Voltage: 300 VDC Max.
- Voltage Breakdown: 450 VDC Max.
- Switching Current: 1,20 A Max.
- Carrying Current: 0,50 A Max.

Order Codes und Dimensions

Thread T	Dimensions (mm/in) L1	L2	Order Code
G1/8 BSP Male (ISO 228)	75	10	FM
	2.54	.39	
G1/8 BSP Male (ISO 228)	88	10	FME
	3.46	.39	

Oil Demister Type TBA-...-OD

Order Codes und Dimensions

Dimensions (mm/in) Length	Diameter	Order Code
140	60	TBA-090-B-OD-140
5.51	2.36	
210	60	TBA-090-B-OD-210
8.27	2.36	

Dimensional drawings: All dimensions in mm (in).

Characteristics

Designed to prevent oil mist from leaving the hydraulic reservoir through Desiccant Breathers and other breathers

Features
- Available in 2 different sizes with lengths of 140mm / 5.51in or 210mm / 8.27in
- Intended for Particle and Desiccant Breather series SDB, with adaptor also suitable with series SDBL and SVDB

Materials
- Housing with cooling ribs made of Aluminum housing with cooling ribs
- Threaded adaptors made of Steel

Oil Demister Insert Type PSU-OD

Order Codes

for use with...	Order Code
SDBL/SVDB-093/096	PSU-OD-090
SDBL/SVDB-121/122	PSU-OD-120

Characteristics

The Oil Demister Insert reduces oil mist from leaving the hydraulic reservoir and is placed inside the Desiccant Breather housing so that the overall length of the Desiccant Breather is not increased. The use of a adaptor is recommended. Due to its placement in the internal thread of the housing, the oil demister insert cannot be combined with valve units of types PSU-P and PSU-QE.

Features
- Available in 2 different sizes
- Intended for series SDBL and SVDB (only Size 090/120)

Material
- Stainless Steel

Adaptor Ring for Stacking Assembly Type PSU-HC

Order Codes

for use with...	Order Code
SDB-121/122 with SDBL-121/122	RING-SDB-120-PSU-HC

Characteristics

Creates a safe seal when using the stacking feature of the Particle and Desiccant Breathers

- Adaptor Ring for Stacking Assembly version SDB+SDBL
- Doubling of the water absorption capacity and Maintenance intervals
- Permanent or temporary mounting (alternative for mounting an additional Particle and Desiccant Breather)
- Type SDB is the basis to ensure the necessary stability (Maximum 2 levels possible)
- Under certain circumstances, additional attachment of the upper level to the SDBL is recommended

Assembled

Refill and Maintenance Kits Type KIT-...-MAINTAIN

Order Codes

for use with...	Order Code
SDB-093/096	KIT-SDB-090-MAINTAIN
SDB-121/122	KIT-SDB-120-MAINTAIN
SDBL-061	KIT-SDBL-060-MAINTAIN
SDBL-093/096	KIT-SDBL-090-MAINTAIN
SDBL-121/122	KIT-SDBL-120-MAINTAIN

Characteristics

Saturated Drying Agent and the Air Breather Element can be easelie replaced by the user with the Refill and Maintenance Kit.

Scope of delivery
- Drying Agent Refill
- Air Breather Element
- PUR Filter discs
- Sealing (only for KIT-SDB-...)
- Thread plugs
- Seal sticker

Individual spare parts are also available separately on request. Please contact STAUFF for further information.

KIT-SDB-...-MAINTAIN

KIT-SDBL-...-MAINTAIN

C

Particle Breather (Air Breather Element) Type SGB

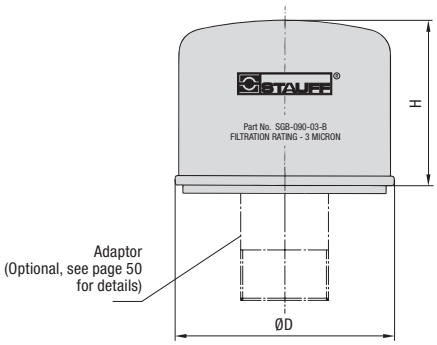

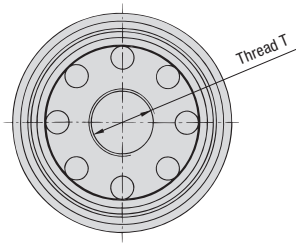

Characteristics

Replaceable Air Breather Elements for STAUFF Particle and Desiccant Breathers.

They can also be used with an Adaptor as seperate air filters for hydraulic reservoirs.

Characteristics

- Diameter of 68 mm / 2.68 in (SGB-060), 100 mm / 3.94 in (SGB-090) or 130 mm / 5.12 in (SGB-120)
- Equipped with female BSP thread (ISO 228)
- Including sealing made of NBR (Buna-N®)
- Operating temperature range: -32 °C ... +100 °C / -25 °F ... +212 °F

Accessories / Options

- Adaptors (for direct installation on top of hydraulic reservoirs)

Please see page 50 for a selection of adaptors available.

Air Flow

- Maximum air flow rates:
  0,05 m^3/min / 1.77 cfm for SGB-060
  0,70 m^3/min / 24.71 cfm for SGB-090
  1,50 m^3/min / 52.97 cfm for SGB-120

Dimensions and Filter Specifications

Type	Thread T*	Dimensions (mm/in) ØD	H	Filter Material	Micron Rating	Max. Air Flow Rate
SGB-060-03-B	M20 x 1,5 Female (ISO 13-2)	68	60	Inorganic Glass Fibre	3 µm	0,05 m^3/min
		2.68	2.36			1.77 cfm
SGB-090-03-B	G3/4 BSP Female (ISO 228)	100	64	Inorganic Glass Fibre	3 µm	0,70 m^3/min
		3.94	2.52			24.71 cfm
SGB-120-03-B	G1-1/4 BSP Female (ISO 228)	130	100	Inorganic Glass Fibre	3 µm	1,50 m^3/min
		5.12	3.94			52.97 cfm

* Adaptors (BSP/BSP and BSP/NPT) are available. Please see page 50 for details.

Order Codes

SGB - 090 - 03 - B - AD

① ② ③ ④ ⑤

① Type

Air Breather	**SGB**

② Size

Diameter of Ø68 mm (Ø2.68 in)	**060**
Diameter of Ø100 mm (Ø3.94 in)	**090**
Diameter of Ø130 mm (Ø5.12 in)	**120**

③ Filter Material / Micron Rating

3 µm Inorganic Glass Fibre	**03**

Contact STAUFF for alternative materials / micron ratings.

④ Connection Thread

Female BSP thread (according to dimension table)	**B**

⑤ Adaptors

without Adaptor (Standard option)	**-**
with Adaptor TBA-090-B (for SGB-090-03-B) or TBA-120-B (for SGB-120-03-B)	**AD**

Please see page 50 for a selection of adaptors available, and contact STAUFF for further information.

	Suction Strainers	**48 - 51**
	SUS (Polyamide End Cap)	**50**
	SUS (Aluminium End Cap)	**51**

D

Suction Strainer (Polyamide End Cap)
Type SUS

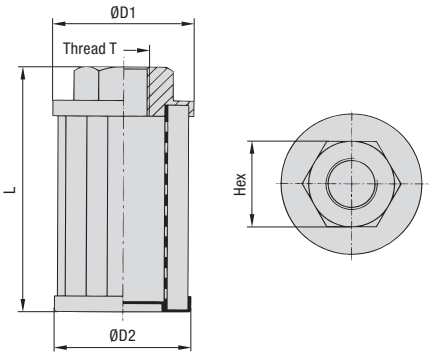

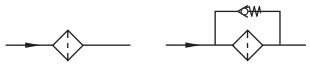

w/o Bypass Valve with Bypass Valve

Flow Characteristics

Nominal Flow Rate vs. Pressure Drop ΔP

The following characteristics are valid for Mineral oils with a mass density of 0,85 kg/dm³ and a kinematic viscosity of 30 mm²/s (cSt) at +38 °C / +100 °F.

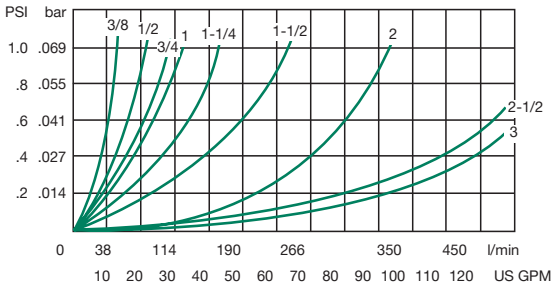

Characteristics

Designed as in-tank suction strainer elements for direct installation into suction lines of pumps; should always be installed below the minimum fluid level of the reservoir

Features

- Available with female BSP thread (ISO 228) or female NPT thread (ANSI B1.20.1)
- Operating temperature range: -20 °C ... +100 °C / -4 °F ... +212 °F

Media Compatibility

- Suitable for use with Mineral and Petroleum based hydraulic fluids (HL and HLP)

Materials

- Threaded end cap made of glass-fibre reinforced Polyamide (PA); see page 59 for version with Aluminium end cap
- Lower end cap and support tube made of Steel, zinc-plated
- Standard filter material is Stainless Steel Mesh (125 µm); alternative micron ratings of 60 µm and 250 µm on request

Contact STAUFF for alternative materials.

Options

- Integrated bypass valve with an opening pressure of 0,2 bar (3 PSI) to reduce the risks of high-pressure drops that can be caused by contaminated strainer elements or high-viscosity fluids

Special sizes, designs, materials and configurations are available on request. Contact STAUFF for details.

Dimensions and Technical Data (Female BSP Threaded Version)

Group Size	Thread T	Dimensions (mm/in) ØD1	ØD2	L	Hex	Filter Surface	Max. Flow Rate
040-G06-075	G3/8 BSP	39,5	38,5	75	22	279 cm²	12 l/min
		1.56	1.53	2.93	.87	43 in²	3.1 US GPM
050-G06-067	G3/8 BSP	50	49	67	26	296 cm²	12 l/min
		1.97	1.93	2.64	1.02	46 in²	3.1 US GPM
050-G08-105	G1/2 BSP	50	49	105	26	518 cm²	15 l/min
		1.97	1.93	4.13	1.02	80 in²	3.9 US GPM
068-G12-105	G3/4 BSP	68	66	105	34	676 cm²	25 l/min
		2.68	2.60	4.13	1.34	105 in²	6.5 US GPM
068-G16-140	G1 BSP	68	66	140	42	930 cm²	50 l/min
		2.68	2.60	5.51	1.65	144 in²	13.0 US GPM
088-G20-140	G1-1/4 BSP	88	85	140	50	1172 cm²	65 l/min
		3.46	3.35	5.51	1.97	182 in²	16.9 US GPM
088-G24-140	G1-1/2 BSP	88	85	140	60	1172 cm²	140 l/min
		3.46	3.35	5.51	2.36	182 in²	36.4 US GPM
102-G24-200	G1-1/2 BSP	102	100	200	72	2427 cm²	140 l/min
		4.02	3.94	7.87	2.83	376 in²	36.4 US GPM
102-G32-200	G2 BSP	102	100	200	72	2427 cm²	230 l/min
		4.02	3.94	7.87	2.83	376 in²	59.8 US GPM
102-G32-225	G2 BSP	102	100	225	72	2811 cm²	230 l/min
		4.02	3.94	8.86	2.83	436 in²	59.8 US GPM
102-G32-260	G2 BSP	102	100	260	72	3249 cm²	230 l/min
		4.02	3.94	10.24	2.83	504 in²	59.8 US GPM
102-G32-300	G2 BSP	102	100	300	72	3798 cm²	230 l/min
		4.02	3.94	11.81	2.83	589 in²	59.8 US GPM
131-G40-191	G2-1/2 BSP	131	128	191	86	2430 cm²	340 l/min
		5.16	5.04	10.24	3.39	377 in²	88.4 US GPM
131-G40-212	G2-1/2 BSP	131	128	212	86	2748 cm²	340 l/min
		5.16	5.04	8.35	3.39	426 in²	88.4 US GPM
131-G48-272	G3 BSP	131	128	272	96	3626 cm²	400 l/min
		5.16	5.04	10.71	3.78	562 in²	104 US GPM
150-G32-151	G2 BSP	150	145	151	70	1812 cm²	400 l/min
		5.91	5.71	5.94	2.76	281 in²	104 US GPM

Dimensions and Technical Data (Female NPT Threaded Version)

Group Size	Thread T	Dimensions (mm/in) ØD1	ØD2	L	Hex	Filter Surface	Max. Flow Rate
050-N06-067	3/8 NPT	50	49	67	26	296 cm²	12 l/min
		1.97	1.93	2.64	1.02	46 in²	3.1 US GPM
050-N06-090	3/8 NPT	50	49	90	26	430 cm²	12 l/min
		1.97	1.93	3.54	1.02	67 in²	3.1 US GPM
050-N08-105	1/2 NPT	50	49	105	26	518 cm²	15 l/min
		1.97	1.93	4.13	1.02	80 in²	3.9 US GPM
068-N12-105	3/4 NPT	68	66	105	34	676 cm²	25 l/min
		2.68	2.60	4.13	1.34	105 in²	6.5 US GPM
068-N16-140	1 NPT	68	66	140	42	930 cm²	50 l/min
		2.68	2.60	5.51	1.65	144 in²	13.0 US GPM
088-N20-140	1-1/4 NPT	88	85	140	50	1172 cm²	65 l/min
		3.46	3.35	5.51	1.97	182 in²	16.9 US GPM
088-N20-195	1-1/4 NPT	88	85	195	60	1709 cm²	65 l/min
		3.46	3.35	7.68	2.36	265 in²	16.9 US GPM
088-N24-140	1-1/2 NPT	88	85	140	60	1172 cm²	140 l/min
		3.46	3.35	5.51	2.36	182 in²	36.4 US GPM
088-N24-226	1-1/2 NPT	88	85	226	60	2012 cm²	140 l/min
		3.46	3.35	8.90	2.36	312 in²	36.4 US GPM
088-N24-260	1-1/2 NPT	88	85	260	60	2344 cm²	140 l/min
		3.46	3.35	10.24	2.36	363 in²	36.4 US GPM
102-N24-200	1-1/2 NPT	102	100	200	72	2427 cm²	140 l/min
		4.02	3.94	7.87	2.83	376 in²	36.4 US GPM
102-N32-260	2 NPT	102	100	260	72	3249 cm²	230 l/min
		4.02	3.94	10.24	2.83	504 in²	59.8 US GPM
131-N40-212	2-1/2 NPT	131	128	212	86	2748 cm²	340 l/min
		5.16	5.04	8.35	3.39	426 in²	88.4 US GPM
131-N48-272	3 NPT	131	128	272	96	3626 cm²	400 l/min
		5.16	5.04	10.71	3.78	562 in²	104 US GPM

Suction Strainer (Aluminium End Cap) Type SUS

Flow Characteristics

Nominal Flow Rate vs. Pressure Drop ΔP

The following characteristics are valid for Mineral oils with a mass density of 0,85 kg/dm³ and a kinematic viscosity of 30 mm²/s (cSt) at +38 °C / +100 °F.

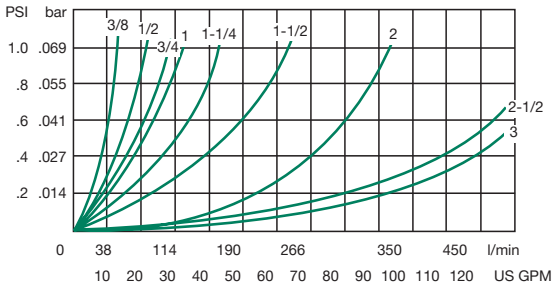

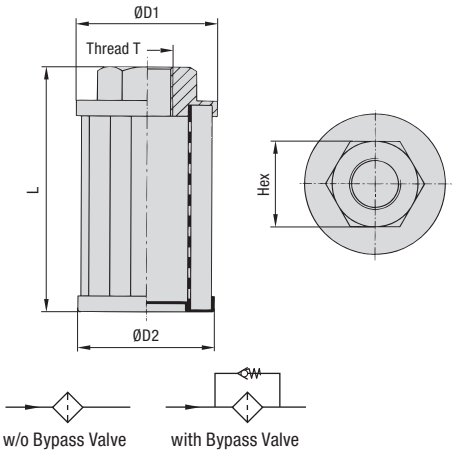

Characteristics

Designed as in-tank suction strainer elements for direct installation into suction lines of pumps; should always be installed below the minimum fluid level of the reservoir

Features

- Available with female NPT thread (ANSI B1.20.1)
- Operating temperature range: -20 °C ... +100 °C / -4 °F ... +212 °F

Media Compatibility

- Suitable for use with Mineral and Petroleum based hydraulic fluids (HL and HLP)

Materials

- Threaded end cap made of Aluminium; see page 58 for version with Polyamide (PA) end cap
- Lower end cap and support tube made of Steel, zinc-plated
- Filter material made of Stainless Steel Mesh (125 µm); alternative micron ratings of 60 µm and 250 µm on request

Contact STAUFF for alternative materials.

Options

- Integrated bypass valve with an opening pressure of 0,2 bar (3 PSI) to reduce the risks of high-pressure drops that can be caused by contaminated strainer elements or high-viscosity fluids

Special sizes, designs, materials and configurations are available on request. Contact STAUFF for details.

Dimensions and Technical Data (Female NPT Threaded Version)

Group Size	Thread T	Dimensions (mm/in) ØD1	ØD2	L	Hex	Filter Surface	Max. Flow Rate
050-N06-067	3/8 NPT	50	49	67	26	296 cm²	12 l/min
		1.97	1.93	2.64	1.02	46 in²	3.1 US GPM
050-N06-090	3/8 NPT	50	49	90	26	430 cm²	12 l/min
		1.97	1.93	3.54	1.02	67 in²	3.1 US GPM
050-N08-105	1/2 NPT	50	49	105	26	518 cm²	15 l/min
		1.97	1.93	4.13	1.02	80 in²	3.9 US GPM
068-N12-105	3/4 NPT	68	66	105	34	676 cm²	25 l/min
		2.68	2.60	4.13	1.34	105 in²	6.5 US GPM
068-N16-140	1 NPT	68	66	140	42	930 cm²	50 l/min
		2.68	2.60	5.51	1.65	144 in²	13.0 US GPM
088-N20-140	1-1/4 NPT	88	85	140	50	1172 cm²	65 l/min
		3.46	3.35	5.51	1.97	182 in²	16.9 US GPM
088-N20-195	1-1/4 NPT	88	85	195	60	1709 cm²	65 l/min
		3.46	3.35	7.68	2.36	265 in²	16.9 US GPM
088-N24-140	1-1/2 NPT	88	85	140	60	1172 cm²	140 l/min
		3.46	3.35	5.51	2.36	182 in²	36.4 US GPM
088-N24-226	1-1/2 NPT	88	85	226	60	2012 cm²	140 l/min
		3.46	3.35	8.90	2.36	312 in²	36.4 US GPM
088-N24-260	1-1/2 NPT	88	85	260	60	2344 cm²	140 l/min
		3.46	3.35	10.24	2.36	363 in²	36.4 US GPM
088-N32-260	2 NPT	88	85	260	70	2344 cm²	230 l/min
		3.46	3.35	10.24	2.76	363 in²	59.8 US GPM
150-N40-213	2-1/2 NPT	150	145	213	90	2741 cm²	340 l/min
		5.91	5.71	8.39	3.54	425 in²	88.4 US GPM
150-N48-272	3 NPT	150	145	272	100	3625 cm²	400 l/min
		5.91	5.71	10.71	3.94	562 in²	104 US GPM

Order Codes

SUS - 088-G24-140 - 125 - P - O

① ② ③ ④ ⑤

① Type

Suction Strainer for direct installation into suction lines of pumps	**SUS**

② Group Size

Select 'Group Size' from corresponding column in dimensional tables

The group size is defined by the diameter ØD1 of the threaded end cap, the thread code (Type and size) and the total length of the suction strainer element (e.g. 040-B06F-075).

③ Filter Material / Micron Rating

Stainless Steel Mesh, 125 µm (standard option)	**125**
Stainless Steel Mesh, 60 µm	**060**
Stainless Steel Mesh, 250 µm	**250**

Contact STAUFF for alternative materials / micron ratings.

④ Material of Threaded End Cap

Glass-fibre reinforced Polyamide	**P**
Aluminium (for female NPT threaded version only)	**A**

⑤ Bypass Option

Without bypass valve (standard option)	**O**
Integrated bypass valve with opening pressure of 0,2 bar (3 PSI)	**B0.2**

	Diffusers	**52 - 55**
	SRV (Female BSP Threaded Version)	**54**
	SRV (Female NPT Threaded Version)	**55**

E

Diffuser
Type SRV
(Female BSP Threaded Version)

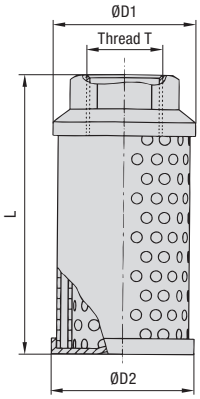

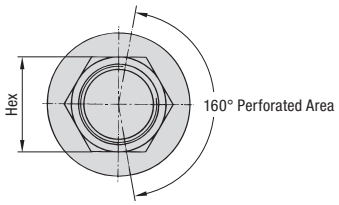

Installation

Installation below the minimum fluid level of the reservoir with the plain area facing the pump inlet

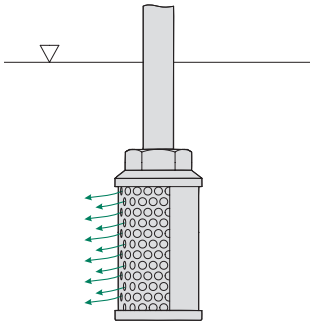

E

Characteristics

Designed for direct installation into return lines to reduce fluid aeration, foaming and noise; should always be installed below the minimum fluid level

Features

- Available with female BSP thread (ISO 228)
  Operating temperature range:
  -20 °C ... +100 °C / -4 °F ... +212 °F
- Max. working pressure: 20 bar / 290 PSI

Media Compatibility

- Suitable for use with Mineral and Petroleum based hydraulic fluids (HL and HLP)

Construction and Materials

- 2 concentric tubes with inner spaced holes
- Threaded end cap made of Aluminium
- Other components made of Steel, zinc-plated

Special sizes, designs, materials and configurations are available on request. Contact STAUFF for details.

Diffusers SRV are ideally suited for use with STAUFF Return Line Filters of the RF series with threaded connection.

For details, please see Catalogue 9 - STAUFF Filtration Technology.

Dimensions and Order Codes (Female BSP Threaded Version)

Thread T	Dimensions (mm/in)				Max.
	ØD1	ØD2	L	Hex	Flow Rate
G3/4	64	62	109	36	50 l/min
	2.52	2.44	4.29	1.42	13 US GPM
G1	64	62	139	46	114 l/min
	2.52	2.44	5.47	1.81	30 US GPM
G1-1/4	86	84	139	60	200 l/min
	3.39	3.31	5.47	2.36	52 US GPM
G1-1/2	86	84	200	60	227 l/min
	3.39	3.31	7.87	2.36	59 US GPM
G2	86	84	260	70	454 l/min
	3.39	3.31	10.24	2.76	118 US GPM
G2-1/2	150	148	212	90	650 l/min
	5.91	5.83	8.35	3.54	169 US GPM
G3	150	148	272	100	950 l/min
	5.91	5.83	10.71	3.94	247 US GPM

Order Codes

SRV - 050 - G12

① ② ③

① Type

Diffuser	**SRV**

② Max. Flow Rate

50 l/min / 13 US GPM	**050**
114 l/min / 30 US GPM	**114**
200 l/min / 52 US GPM	**200**
227 l/min / 59 US GPM	**227**
454 l/min / 118 US GPM	**454**
650 l/min / 169 US GPM	**650**
950 l/min / 247 US GPM	**950**

③ Connection Thread (Female)

G3/4	**G12**
G1	**G16**
G1-1/4	**G20**
G1-1/2	**G24**
G2	**G32**
G2-1/2	**G40**
G3	**G48**

Contact STAUFF for alternative threads.

Diffuser
Type SRV
(Female NPT Threaded Version)

Installation

Installation below the minimum fluid level of the reservoir with the plain area facing the pump inlet

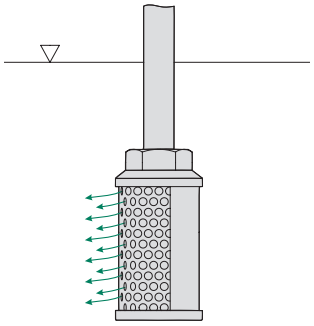

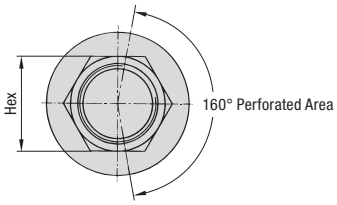

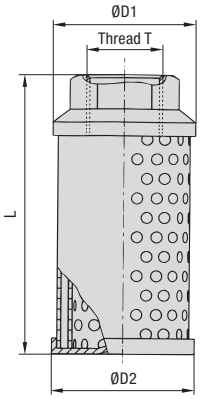

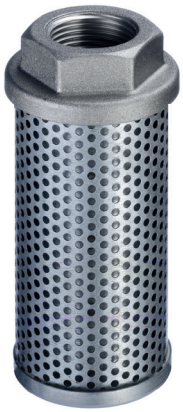

Dimensions and Order Codes (Female NPT Threaded Version)

Thread T	Dimensions (mm/in)				Max.
	ØD1	ØD2	L	Hex	Flow Rate
3/4 NPT	64	62	109	36	50 l/min
	2.52	2.44	4.29	1.42	13 US GPM
1 NPT	64	62	139	46	114 l/min
	2.52	2.44	5.47	1.81	30 US GPM
1-1/4 NPT	86	84	139	60	200 l/min
	3.39	3.31	5.47	2.36	52 US GPM
1-1/2 NPT	86	84	200	60	227 l/min
	3.39	3.31	7.87	2.36	59 US GPM
2 NPT	86	84	260	70	454 l/min
	3.39	3.31	10.24	2.76	118 US GPM
2-1/2 NPT	150	148	212	90	650 l/min
	5.91	5.83	8.35	3.54	169 US GPM
3 NPT	150	148	272	100	950 l/min
	5.91	5.83	10.71	3.94	247 US GPM

Characteristics

Designed for direct installation into return lines to reduce fluid aeration, foaming and noise; should always be installed below the minimum fluid level

Features

- Available with female NPT thread (ANSI B1.20.1)
- Operating temperature range: -20 °C ... +100 °C / -4 °F ... +212 °F
- Max. working pressure: 20 bar / 290 PSI

Media Compatibility

- Suitable for use with Mineral and Petroleum based hydraulic fluids (HL and HLP)

Construction and Materials

- 2 concentric tubes with inner spaced holes
- Threaded end cap made of Aluminium
- Other components made of Steel, zinc-plated

Special sizes, designs, materials and configurations are available on request. Contact STAUFF for details.

Order Codes

SRV - 050 - N12

① ② ③

① Type

Diffuser	**SRV**

② Max. Flow Rate

50 l/min / 13 US GPM	**050**
114 l/min / 30 US GPM	**114**
200 l/min / 52 US GPM	**200**
227 l/min / 59 US GPM	**227**
454 l/min / 118 US GPM	**454**
650 l/min / 169 US GPM	**650**
950 l/min / 247 US GPM	**950**

③ Connection Thread (Female)

3/4 NPT	**N12**
1 NPT	**N16**
1-1/4 NPT	**N20**
1-1/2 NPT	**N24**
2 NPT	**N32**
2-1/2 NPT	**N40**
3 NPT	**N48**

Contact STAUFF for alternative threads.

Diffusers SRV are ideally suited for use with STAUFF Return Line Filters of the RF series with threaded connection.

For details, please see Catalogue 9 -STAUFF Filtration Technology.

STAUFF

Product-Specific Abbreviations 66

Product-Specific Abbreviations

Bezeichnung	Produktkategorie	Produktbeschreibung	Seite
AP	Particle and Desiccant Breathers	Adaptor Plate	52
ASMB-1	Tank Filler Breathers	Side Mount Bracket (Polyamide Version)	38
ASMB-2	Tank Filler Breathers	Side Mount Bracket (Aluminium Version)	38
DT04-4P	Fluid Level and Temperature Indicators	Deutsch Adaptor Cable	20
EBF	Tank Filler Breathers	Extended Bayonet Flange	39
FM	Particle and Desiccant Breathers	Visual Contamination Indicator	52
FME	Particle and Desiccant Breathers	Visual-Electrical Contamination Indicator	52
PSU	Particle and Desiccant Breathers	Valve Units	51
PSU-HC	Particle and Desiccant Breathers	Adaptor Ring for Stacking Assembly	53
PSU-OD	Particle and Desiccant Breathers	Oil Demister Inserts	53
KIT-...-MAINTAIN	Particle and Desiccant Breathers	Refill and Maintenance Kits	53
SDB	Particle and Desiccant Breathers	Particle and Desiccant Breathers (Robust Design)	44-45
SDBL	Particle and Desiccant Breathers	Particle and Desiccant Breathers (Compact Design)	46-47
SDV-SNA / SNK	Fluid Level and Temperature Indicators	Anti-Drain Valve	20
SES	Tank Filler Breathers	Plastic Filler Breather (Threaded Version)	31
SES	Tank Filler Breathers	Plastic Filler Breather (Welded Version)	31
SGB	Particle and Desiccant Breathers	Particle Breather	54
SLTS	Fluid Level and Temperature Indicators	Level-Temperature Switch	21
SMBB-47	Tank Filler Breathers	Metal Filler Breather (Bayonet Version)	33
SMBB-80	Tank Filler Breathers	Metal Filler Breather (Bayonet Version)	35
SMBL	Tank Filler Breathers	Lockable Metal Filler Breather (Clamping, Threaded and Push-On Version)	37
SMBP-80	Tank Filler Breathers	Metal Filler Breather (Push-On Version)	36
SMBT-47	Tank Filler Breathers	Metal Filler Breather (Threaded Version)	32
SMBT-80	Tank Filler Breathers	Metal Filler Breather (Threaded Version)	34
SNA	Fluid Level and Temperature Indicators	Level Gauge	14
SNK	Fluid Level and Temperature Indicators	Level Gauge	16
SNKK	Fluid Level and Temperature Indicators	Level Gauge	17
SPB-1 / 2 / 3	Tank Filler Breathers	Plastic Filler Breather (Threaded Version)	24
SPB-4 / 5	Tank Filler Breathers	Plastic Filler Breather (Flange Version)	25
SPBM	Tank Filler Breathers	Plastic Filler Breather Mini (Threaded Version)	30
SPBN	Tank Filler Breathers	Plastic Filler Breather (Compact Design; Threaded Version)	28
SPBN	Tank Filler Breathers	Plastic Filler Breather (Compact Design; Bayonet Version)	28
SRV	Diffusers	Diffusers (Female BSP Threaded Version)	62
SRV	Diffusers	Diffusers (Female NPT Threaded Version)	63
SUS	Suction Strainers	Suction Strainers (Polyamide End Cap)	58
SUS	Suction Strainers	Suction Strainers (Aluminium End Cap)	59
SVDB	Particle and Desiccant Breathers	Desiccant Breathers (Simplified Design)	48-49
T1 / T2	Fluid Level and Temperature Indicators	Dial Thermometer with Probe	18
TBA	Particle and Desiccant Breathers	Adaptors	50
TBA-OD	Particle and Desiccant Breathers	Oil Demister	53
TS	Fluid Level and Temperature Indicators	Thermo Switch	18
TS-SNA / SNK-PT100	Fluid Level and Temperature Indicators	Temperature Sensor	19
TS-SNA / SNK-PT100-T	Fluid Level and Temperature Indicators	Temperature Sensor with Direct Installation Set	19
WR	Tank Filler Breathers	Anschweißring	39

STAUFF®